Watch Webinar Recording Here

Fatigue Design, Verification and Validation of Mechanical Equipment

Wednesday, 30th of November 2022 | Technical Topic Webinar

Presented By

Mr. Rob Widders, Principal Consulting Engineer & Mechanical/Heavy Industry Expert

About EIT

We are dedicated to ensuring that you receive a world-class education and gain skills that you can immediately implement in the workforce.

Engineering Specialists

EIT is one of the only institutes in the world specializing in Engineering. We deliver professional certificates, diplomas, advanced diplomas, undergraduate and graduate certificates, bachelor's and master's degrees, and a Doctor of Engineering.

Industry Oriented Programs

Our programs are designed by industry experts, ensuring you graduate with cutting-edge skills that are valued by employers. Our program content remains current with rapidly changing technology and industry developments.

World-Class Australia Accredited Education

Our vocational programs and higher education degrees are registered and accredited by the Australian Government. We have programs that are also recognized under three international engineering accords.

Industry Experienced Lecturers

Our lecturers are highly experienced engineers and subject specialists with applied knowledge. The technologies employed by EIT, both online and on-campus, enable us to source our lecturers from a large, global pool of expertise.

Unique Delivery Model

We deliver our programs via a unique methodology that makes use of live and interactive webinars, an international pool of expert lecturers, dedicated learning support officers, and state-of-the-art technologies such as hands-on workshops, remote laboratories, and simulation software.

CRICOS Provider Number: 03567C | Higher Education Provider Number: 14008 | RTO Provider Number: 51971

Introduction - Presenter

Mr. Rob Widders BE (Hons1 Mech USyd), MEngSc (UNSW)

Principal Consulting Engineer with global machinery engineering consulting company. 42 years in heavy industry since graduation.

Completion of all mechanical engineering technical and project management activities, hands-on actions in design and analysis, fabrication works and operational site visits, troubleshooting and design rectifications, quality assurance and management, maintenance and repair scopes and planning including turnaround site participation, reporting and technical writing, tendering and proposals, presentation of results and forward plans including budgets, invoicing, office management, guiding and mentoring staff, business development.

Projects completed in all states Australia wide as well as NZ, PNG, Indonesia, Fiji, Laos, Korea, China, Germany, Africa, USA and Sweden (including travel to all these locations). Clients have included many mining and mineral processing plants and manufacturers (Alcoa, Ok Tedi, Newcrest, Sino Gold, Sino Iron, Sedgman, Ausenco, Metso, Outotec) and heavy industry (Komatsu, CSR Sugar, ANI Ruwolt, Howden Group, EDI Rail, Nuplex, BOC etc). 1998-2007 Adjunct Senior Lecturer Sydney University Aerospace, Mechanical and Mechatronic Engineering Final Year Mechanical Design course, also supervising many theses students. 2017-21 presented 1st and 4th year professional engineering classes.

Agenda

1	Introduction
2	Learnings
3	Context, Codes, Consequences | Case study 1 – ore grinding mills
4	Typical machine loading cycles | Case study 2 – vibrating screens
5	Fatigue Design Philosophies | Case studies 3, 4 – centrifugal fans
6	Fatigue Design Recommendations | Case study 5 – axial fan
7	Design verifications – FEA and fatigue analysis to BS7608:2014
8	Post weld fatigue improvement Case study 6 – chill roll Case study 7, 8 – ship structures Case study 9 – dump truck tray
9	Low – mid cycle fatigue (strain life), multi-axial fatigue
10	Design Validation Aspects | Case study 11 – agitator
11	References (2 pages, 39)

Above MO Group mill (Ref 1)

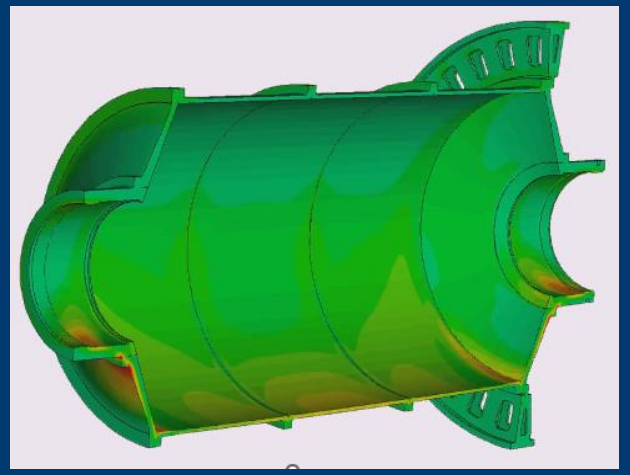

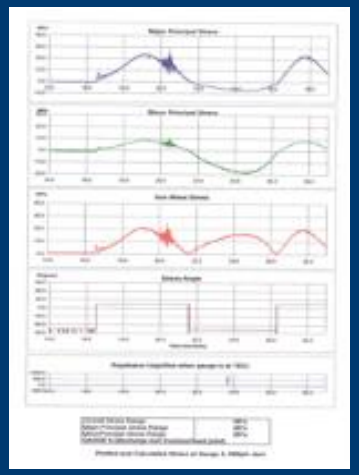

Above Non MO Group mill

Introduction

1. This webinar outlines the recommended processes for overall and detail design to reduce the potential for the occurrence of fatigue cracking damage in operation. Design verification and validation methods are included.

2. Outlined in each step are the actions to be taken, and the standards and reference documents to be followed. This ensures that all defined steps are followed to deliver a product to address design for fatigue loading.

3. 11 case studies are included. The webinar details the 3D geometrical form of the equipment, particularly at joints and transitions, which are needed to suitably accept the loading conditions, by providing good structural continuity and load paths in a holistic design manner. The 11 case studies are some of the many the author has been involved in as principal engineering consultant, summarising the design shortcomings, where the fatigue issues occurred, and what the design rectification solutions were. It is trusted that the text will be of use to undergraduate, graduate as well as more senior engineers in the need for good fatigue design practices.

4. Fatigue design verification methods are also summarised, specifically in the use of computational finite element methods and correlation of the outputs with the typical fatigue analysis standards BS7608 (Ref 2) and the numerous IIW fatigue codes (ref 5, 6, 10, 14). Iterations of the verification and design process must be completed to result in a fit for purpose design solution of required operational life.

Introduction

5. Finally fatigue validation (via strain gauging and vibration monitoring etc) methods are summarised, again along with the iterative use of design / verification / validation actions as may be needed. The webinar will not be compiled from a metallurgy or materials science basis – rather a practical engineering design basis.

6. Obviously the webinar content has been compiled so that the pdf file version of it, available after the initial delivery, can be perused as relevant. The 40 minutes webinar timing means that some of the 87 slides will be quickly passed over for this purpose. The case studies and associated schematics span from lates 80s to late 2010s – obviously some schematics from earlier in this time very clearly period reflect that – the learnings from them are the key.

The author gratefully acknowledges the enormous efforts of Barry Morris in leading the significant instrumentation engineering aspects of hundreds of projects completed globally 1987-2010. These efforts included design, development, installation, recording, post-processing and diagnostic assessments of strain/stress, vibration, load, temperature, pressure etc and included the original manufacture of multi-channel hard wired as well as multiplexed radio telemetry systems for temporary and permanent monitoring. Projects were completed on a myriad of equipment and plant types across most industry spheres including mineral processing, mining, transport (rail, road), manufacturing, critical infrastructure (gas pipelines and railway tracks) and shipping (naval, merchant). Thanks Barry.

Learnings

1. Gain a practical understanding of the fundamentals of good design, verification and validation processes for fatigue operational conditions across a range of mechanical equipment and plant.

2. Become aware of the nature of fatigue loadings – low cycle, medium/high cycle, cumulative fatigue - rainflow analysis, cycle and damage histograms. Gain exposure to the fatigue design and operational conditions of numerous heavy industry mechanical equipment and plant types, so that such knowledge can be applied in their own day to day design, fabrication, and maintenance activities.

3. Learn the nature and application of the critical sequential and iterative steps in the combined fatigue design / verification / validation process so that none are missed, all are applied in the correct order and with the required intensity, so that product function, quality, durability and integrity results.

4. The above are emphasised by means of 11 case studies across a range of equipment and industry spheres.

Context, Codes

Suitable fatigue design is critically needed to avoid fatigue cracking due to rotating bending, structural dynamics, natural frequency and resonance, thermal fatigue, pressure induced fatigue, poor restraints inducing fatigue. All possible loadings must be known and covered in the design and verification processes, incl lateral (10% etc). See below from ASM International (formerly American Society for Metals) Ch14 (Ref 3);

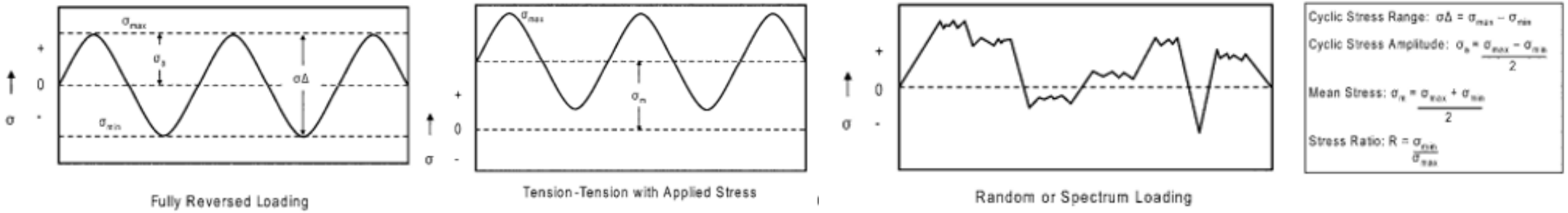

ASMI estimates that fatigue contributes to approximately 90% of all service failures. Fatigue awareness began in the early 1800s in Europe when investigators correlated repeated loadings to bridge and railway component failures. Of course such loadings incur in most mechanical equipment types.

Main fatigue design and analysis codes are; obviously there are many others globally, of similar content. See references.

- BS7608:2014 “Guide to Fatigue Design and Assessment of Steel Products” (Ref 2)
- IIW International Institute of Welding (IIW), XIII-2460-13 – “Recommendations for Fatigue Design of Welded Joints and Components, 2013” (Ref 6)
- Sections of AS4100, AS3990, many others globally.

Fatigue Consequences

Early 2000s - Unfortunate collapse of reclaimer due to fatigue cracking and fracture inside box section outrigger of one of three legs – <u>very difficult weld to inspect – leading to complete compression buckling of the top of the outrigger.</u>

Machine Collapse Accidents

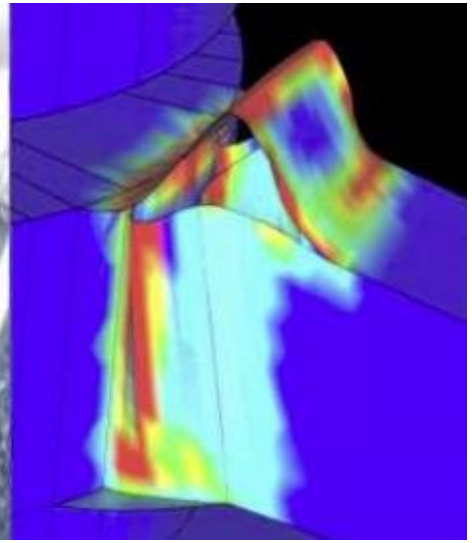

Vehicle Component Failures

Case Study 1 – Ore Grinding Mills

Terminology

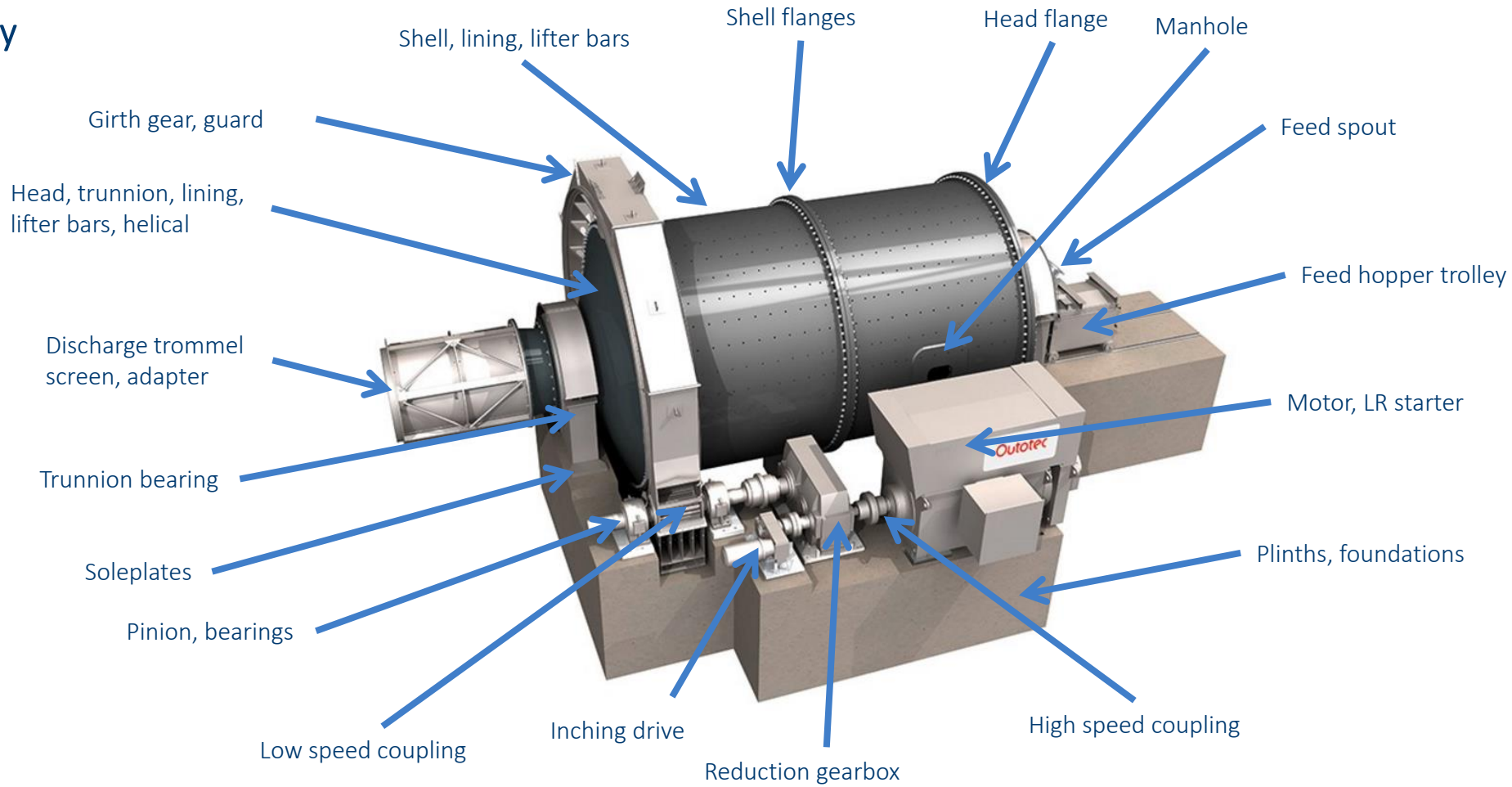

Typical grinding mill layout and components (Metso Outotec) Mogroup.com (Ref 1)

Case Study 1 – Ore Grinding Mills

Open girth gearing – overheating, poor grease spread, misalignment, dirt contaminated. Looseness of joint bolting.
Bolt tension maintenance – structural flange joints, liners.
Maintain 6 mm rubber backing liner covering of shells and heads.
Trunnion bearings, pinion bearings, gearbox, motor, soleplates and plinth integrity.
Foundations integrity.
Axial float in free trunnion bearing.
Broken liners or grates.
Trommel remains integral.
Structural or torsional resonances in mill or baseplates / foundations, or drive train.

Fatigue cracking. More prevalent at welded joints but can also occur in parent material. Welded joints of shell and heads, including manholes which frequently are problem spots due to (older designs) low fatigue resistance fillet welds (cf full penetration butt and T-butt welds). Parent material of trunnions and flange joints – the latter due to bolt hole clearance issues particularly if machined holes are not drilled accurately and have variable edge distances. Trunnion grease seal groove – careful this does not corrode then fatigue. Corrosion which reduces fatigue resistance. Erosion of rotating structural components.

Main design and operational issues

Potential fatigue cracking sites

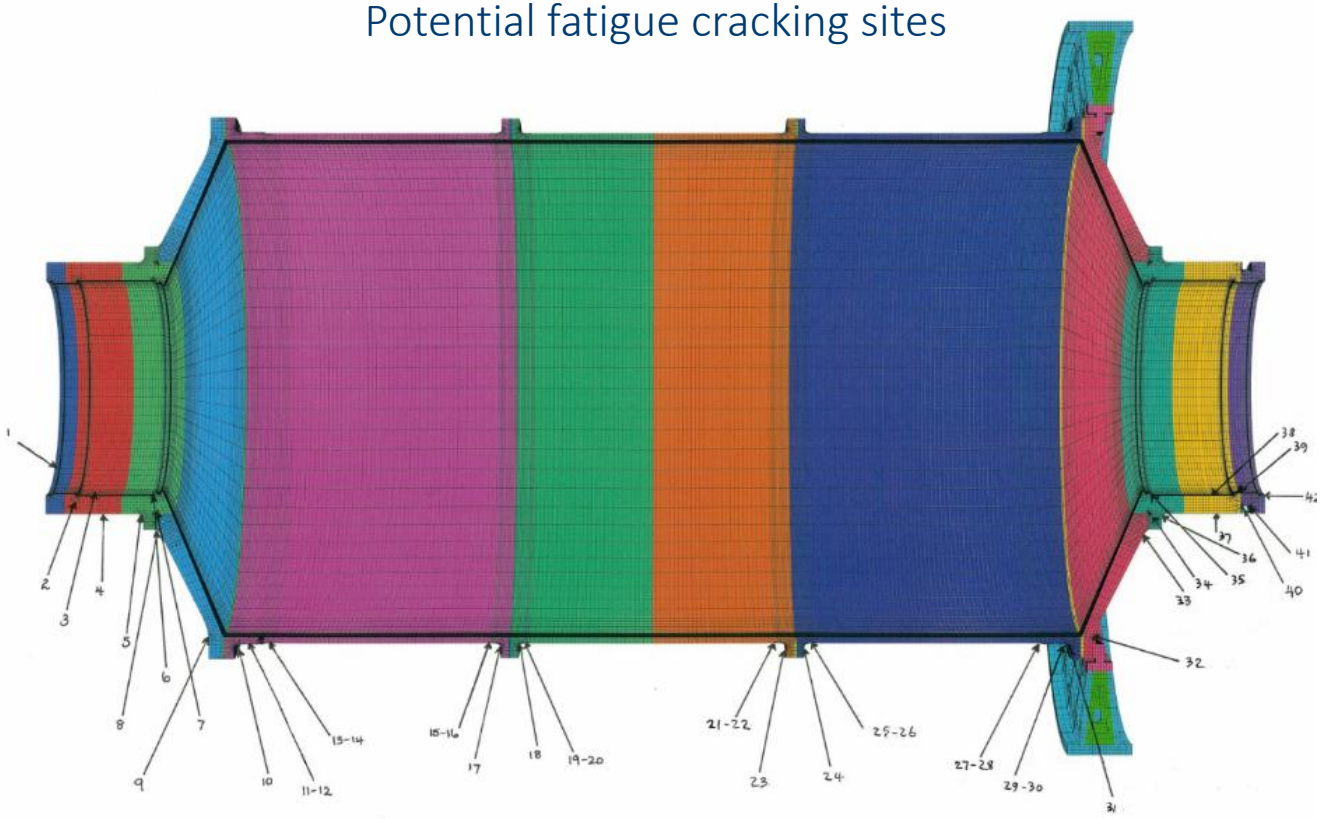

Case Study 1 – Ore Grinding Mills

Engineering Institute of Technology.

Mill new shell design – Egypt site who bought 2nd hand mill – shell was not in the condition expected

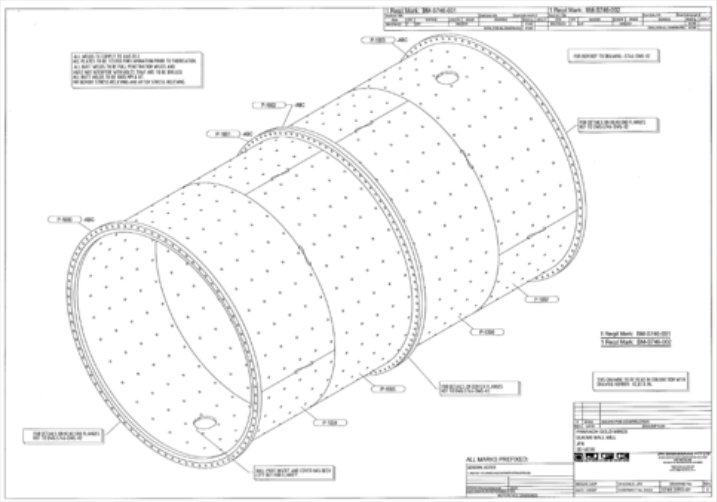

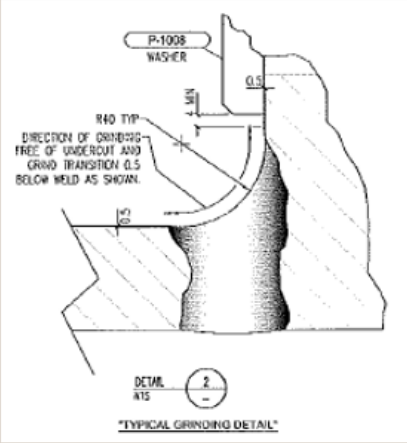

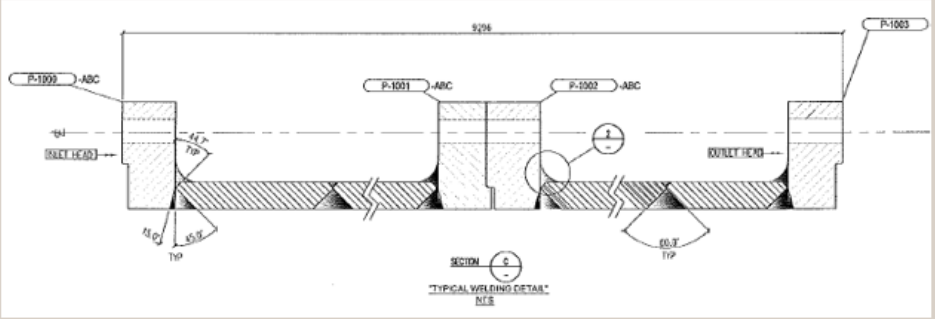

Case Study 1 – Ore Grinding Mills

Structural design criteria – 25 year life, fatigue to BS7608. Shell, heads and trunnions intensive design for fatigue. At 15rpm mill speed 2x10^6 cycles in 3.3 months. Motor speed typically 740rpm (large reduction through girth gearing). Charge typically 40% volume, sg 5-6.

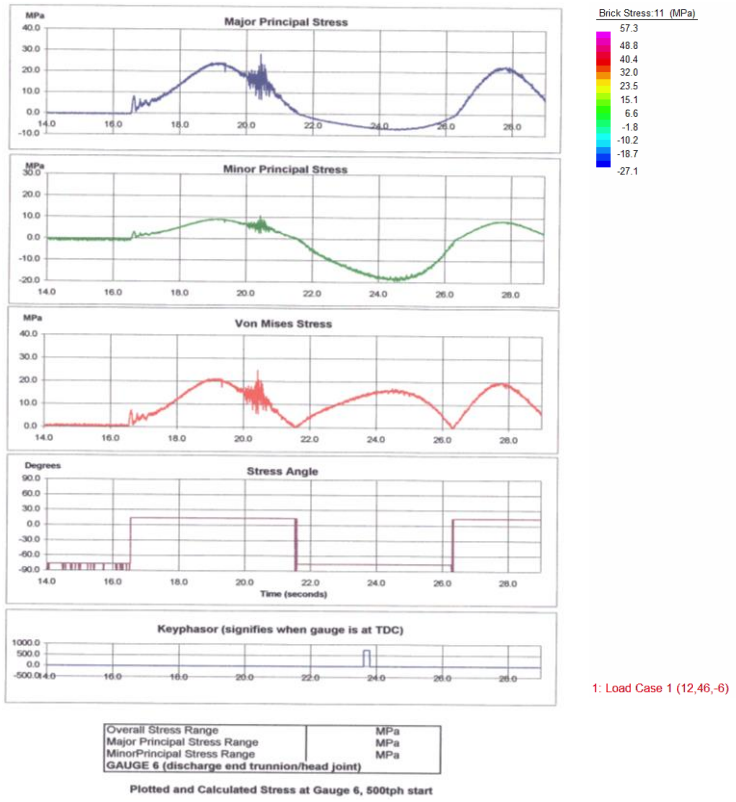

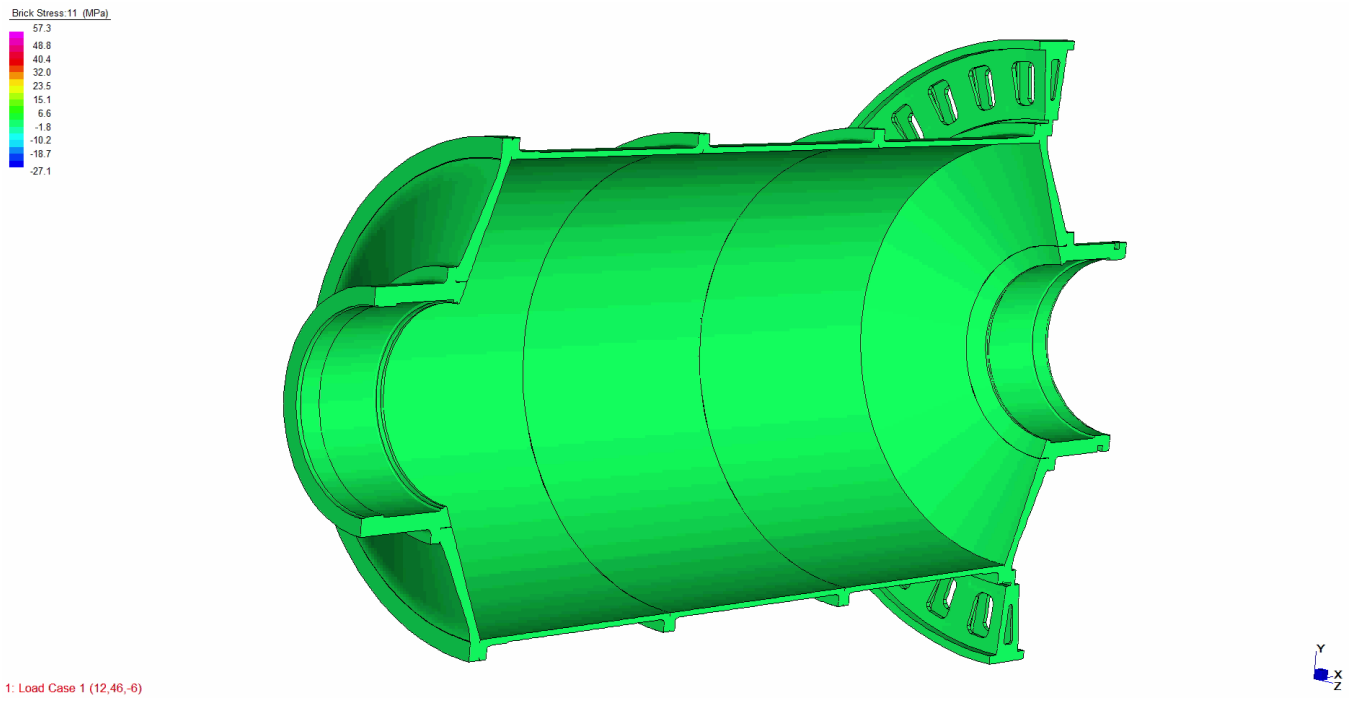

AVI
Typical
ball mill FEA

Case Study 1 – Ore Grinding Mills

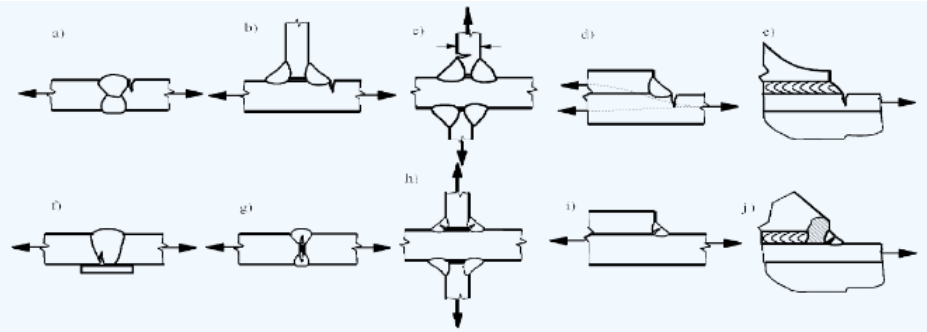

Figure (2.2)-8: Various locations of crack propagation in welded joints.

Table 7 Classification of details: load carrying fillet and T-butt joints [A)] between plates [B)]

Type no.	Product form	Location of potential crack initiation	Detail	Manufacturing requirements	Special treatments or requirements	Design stress area	Class: Nominal stress	Class: Hot-spot stress	Thickness and bending correction (see 16.3.2)	Notes	Sketch
7.1	Rolled steel plates, sections and built-up members	At weld toe in member X	Weld joining two members end to end with third member transverse through joint. Member Y can be regarded as one with a non-load-carrying weld (see joint type 4.2 or 4.3).	Full penetration butt weld with longitudinal axis in line.	Any undercut should be ground smooth particularly on the corners of member X. If width permits make weld continuous around the joint; otherwise grind ends flush with edge of member X. All regions of plate Y stressed in the through thickness direction to be free from lamellar defects and tears. Weld toe improvement techniques applicable but note need to assess partial penetration welded joints with respect to potential failure through the weld throat (see type 7.8)	Cross section of member X at weld toe. Allowance should be made for any misalignment of the joint exceeding that already allowed for in the classification (see 8.7.2 and 8.5.2.1). In some circumstances (see 8.7.2) it might be necessary to include a stress concentration factor in the nominal stress design calculation.	F	D	Applicable assuming t_{eff} = thickness of plate X and b = 0.25	Weld metal failure does not govern with full penetration welds.	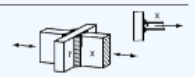
7.2				Partial penetration butt or fillet weld with longitudinal axis in line.			F2	D		In this type of joint failure is likely to occur in the weld throat unless the weld is made sufficiently large. (See joint type 7.8).	
7.3			Weld joining the end of one member to the surface of another.	Full penetration butt weld made from one or both sides.		Cross section of member X at weld toe	F	D		See joint type 7.1.	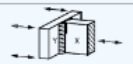
7.4			Member Y can be regarded as one with a non-load-carrying weld (see joint type 4.2 or 4.3).	Partial penetration butt or fillet welds made from both sides			F2	D		See joint type 7.2.	

BS7608 fatigue S-N Curves: design criteria is 2.3% failure curve.
See later section for full design verification process.

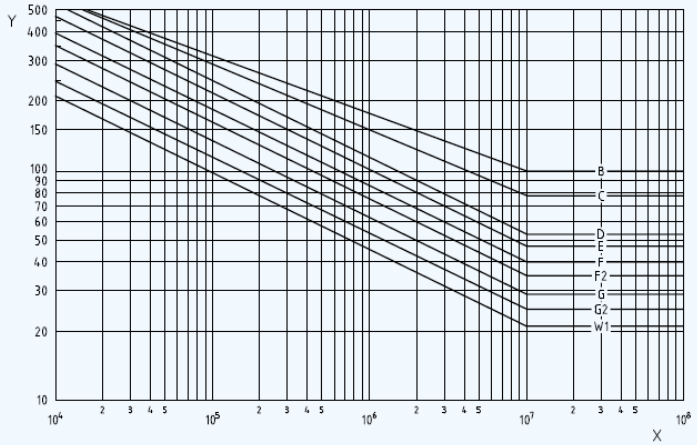

These curves should not be used for calculation purposes (see Table 18).

Adjustments should be made, where appropriate in accordance with **16.3** and **16.4**.

Key

X Endurance N, cycles Y Stress range S_r, N/mm²

a) Standard basic design S_r-N curves (mean minus two standard deviations of log N) for direct stress failure

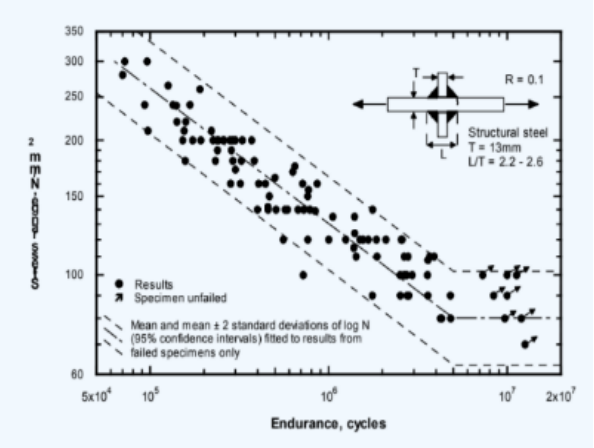

Statistical scatter of fatigue of welds. +/-3 on life. Ref 15

Case Study 1 – Ore Grinding Mills

Typical Audit and Operational Failure Issue – *Manholes / Ball Ports. Late 90s.*

- The typical service life of 15rpm ball or SAG mills used in mineral processing plants is 20-25 years, with some mills still going strong after 40 years (albeit with good operational and maintenance practices).
- A common area of failure in older mills is fatigue problems around manholes.
- Manholes are typified by;
  - Cut-outs in the shell
  - Some have excessively tight corner radii
  - Some have been inadvertently designed using an outstand type perimeter and cover bolted to a flange, also with **very low fatigue resistance fillet welds**

Case Study 1 – Ore Grinding Mills

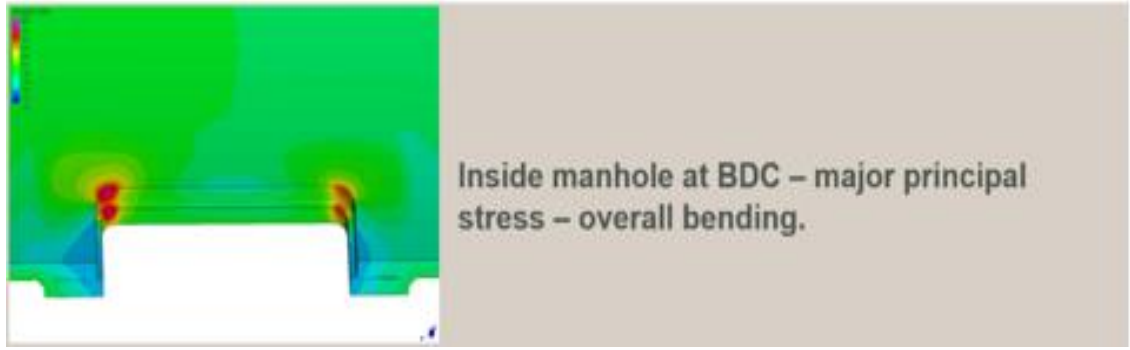

An improved manhole – doubler with clamped in cover. But only partial penetration welds.

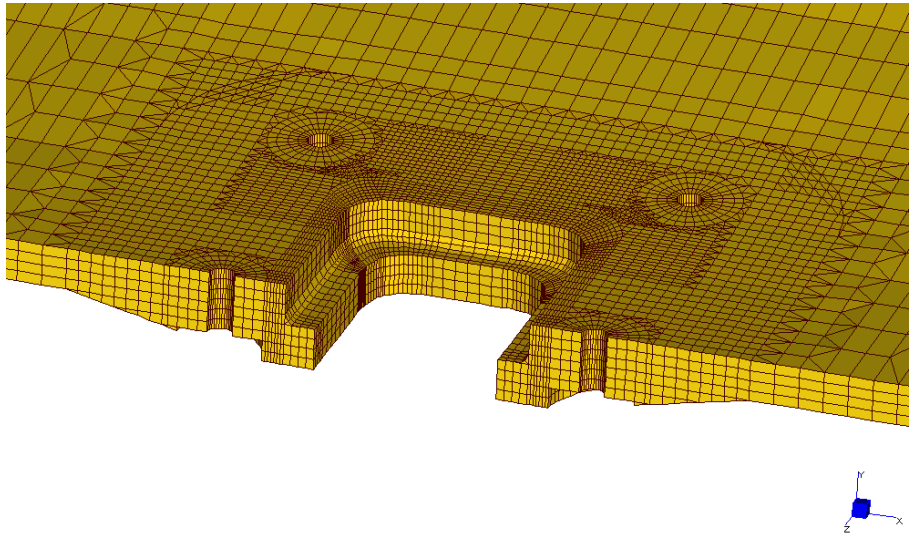

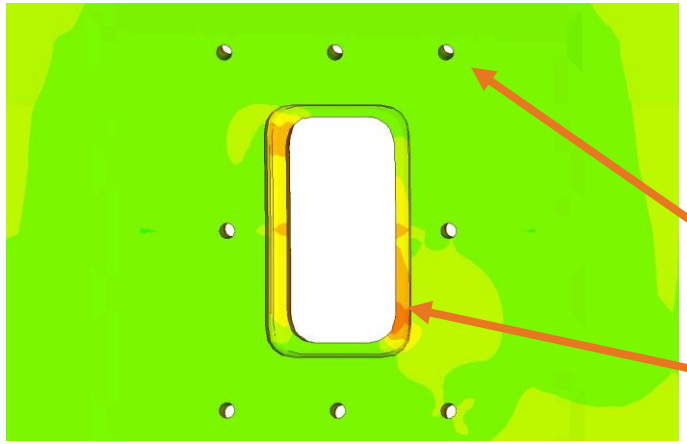

Lifter bar bolt holes

Cover inserts into periphery with two external clamp bars.

However the optimum manhole is a full penetration butt-welded insert type manhole, with a clamped cover.

This rectification process has been successfully implemented on several mills throughout Australasia.

Typical flowchart, machine loading cycles

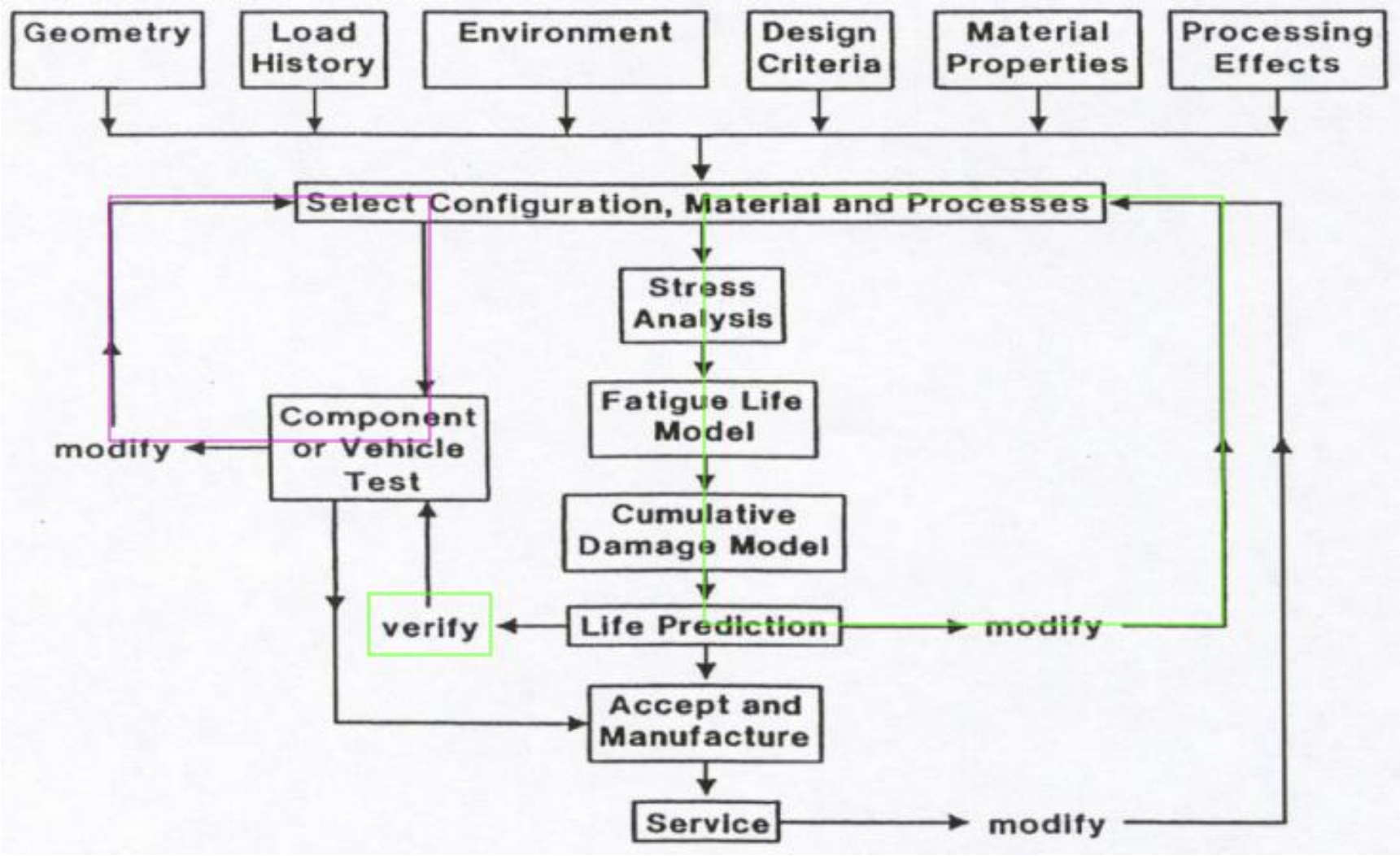

Ref 22

Typical flowchart, machine loading cycles

NAME	PURPOSE	STRUCTURAL DETAIL	DESCRIPTION OF LOAD HISTORY	LOAD CHAN-NELS[1)]	BLOCK SIZE[1)] (Cycles)[2]	EQUIV. USAGE	SSF[3)]	No. OF LOAD LEV.	YEAR /REF.[4)]
WASH I	offshore structures	structural members of oil platforms	composed of narrow band loading with 6 sea states of varying intensity	1	$5 * 10^5$	1 year	3.87	14	1989 [12,13]
WAWESTA	steel mill drive	drive train components	sequence of 10.000 milling runs	1	28,200	1 month	1.97	23	1990 [66]
CARLOS	car loading standard (3 uniaxial sequences)	vertical, lateral, longitud. forces on front suspension parts	random with occasional fluctuations of mean stress, mixture of 5 road types, R = -0.18 (ve), -0.64 (la), -1.6 (lo)	1	ve: 136,000, la: 95,200 lo: 84,000	40,000 km	2.66 2.46 2.70	≤ 64	1990 [10]
CARLOS multi	car loading standard (multi-axial)	4-channel load components for front suspension parts	time histories, sample frequency 0.005 sec, correlation functions between load components based on guide functions	4	similar to CARLOS uniaxial	40,000 km	similar to CARL. uniaxial	/	1994 [23]
CARLOS PTM	car power train (manual shift)	power train comp. e.g. clutch, gear-wheels, shafts, bearings , universal joints	load-time histories and load sequences of torques and speeds, separated for 5 gear positions test variants optimised for different assembly groups	2	depends on transm. in-/output gear position	6,000 km	2.49 (Transm input) gear pos 1-5,	/	1997 [11]
CARLOS PTA	car power train (automatic transmissions)	power train components , similar to PTM	similar to CARLOS PTM	2	depends on transm. in-/output, gear pos.	6,000 km	1.92 (Transm output) g.p.1-5	/	2002 [21]
CARLOS TC	car trailer coupling, passenger vehicles	trailer coupling devices and vehicle supporting structure	load-time histories (longitud., lateral, vertical), optimised for test time and test facility limits	3	3 short blocks, repetition rule	total life verification	lo: 3.78 la: 3.05 ve: 3.05	/	2003 [9]

[1)] No. of load components or additional variables (time, temperature etc.); [2)] approx. 3) spectrum shape factor (see chapter 2.2)
[4)] partly the references do not cite the original report(s), but those available to the public.

Heuler/Klätschke, published in: Int J Fatigue 27 (2005), No. 8, pp. 974-990 *Ref 4*

Case Study 2 – Vibrating Screens

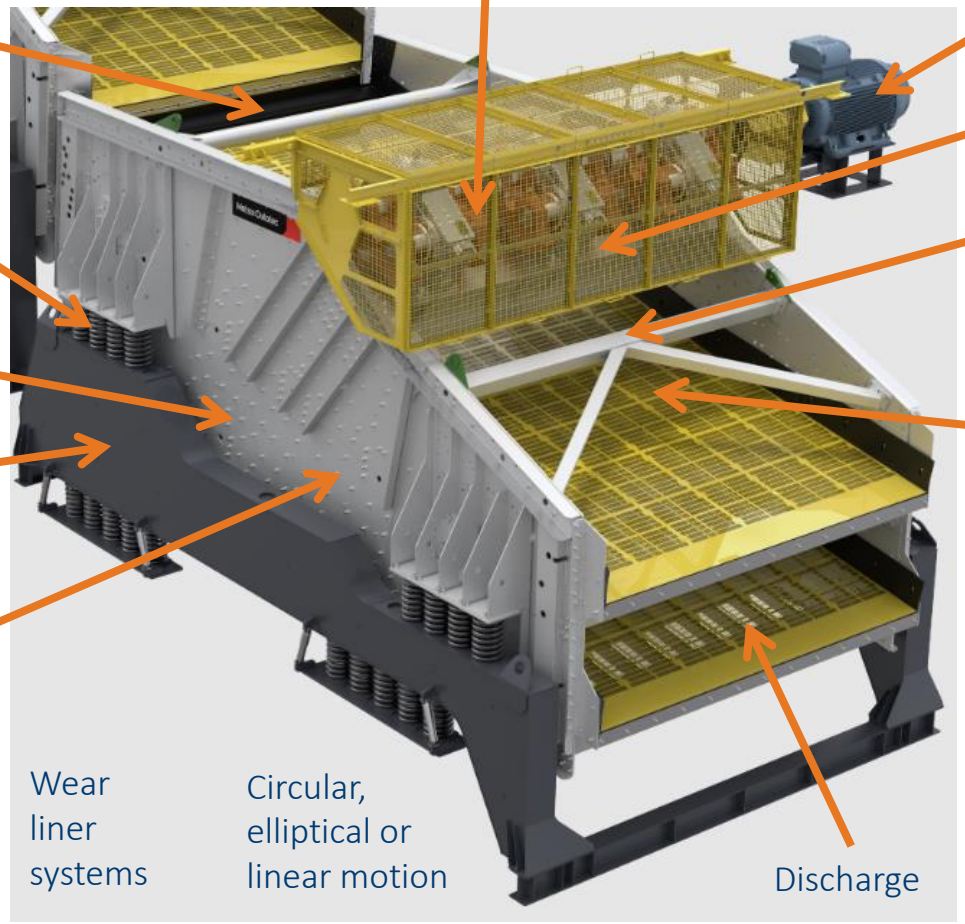

Metso Outotec
Mogroup.com
Ref 1

Case Study 2 – Vibrating Screens

Design criteria including total life, initial continuous operations without maintenance, fatigue design, erosion / wear control, if there is a back up frame to rotate through every (say) 3 years. At 750rpm 2x10^6 cycles in 1.85 days.

Boundary of supply, associated static fixtures – feed chute, discharge chute/s, underside chute, under pan, dust hood, spray bars, other. Standards and codes – eg;

- BS7608:2014 – fatigue design
- AS4100 – steel structures
- AS1554.5 – welding for high levels of fatigue loading
- AS4458 – pressure equipment manufacture – as regards the post weld heat treatment for reduction of residual stresses
- WTIA technical note 11 – commentary on structural steel welding – weld grinding / profiling / dressing
- WTIA guidance note 06 – post weld heat treatment of welded structures
- 12 years service life, 98% utilisation, 4 years between maintenance.

Case Study 2 – Vibrating Screens

Common Causes of Screen Failure;

1. Structural overload caused by material feed issues,
2. Excitation of structural natural frequencies,
3. Spring breakage,
4. Fatigue damage – see further below,
5. Protective coating and/or lining breakdown,
6. Stress corrosion cracking after protective coating damage,
7. Corrosion fatigue after protective coating damage,
8. Wear and erosion – to deck panels as well as main body components,
9. Mechanism gearing and bearing failures, seals,
10. Drive system failures – cardan shafts and couplings, pulley drives, motors,
11. Bolting looseness and breakage – securing exciters or main body structural components,
12. Fretting.

Case Study 2 – Vibrating Screens

Screen fatigue failures can essentially occur in most components – including;

1. Main mechanism/drive beams,
2. Other cross beams,
3. Beam flanges,
4. Side plates main plate members,
5. Side plate stiffeners,
6. Longitudinal stringers,
7. Longitudinal stringer cleats (connection brackets) on cross beams,
8. Feed boxes,
9. Discharge lip,
10. Spring platforms and associated gussets,
11. Isolation frame,
12. Support springs,
13. Exciter bolts,
14. Other bolted joints.

Case Study 2 – Vibrating Screens

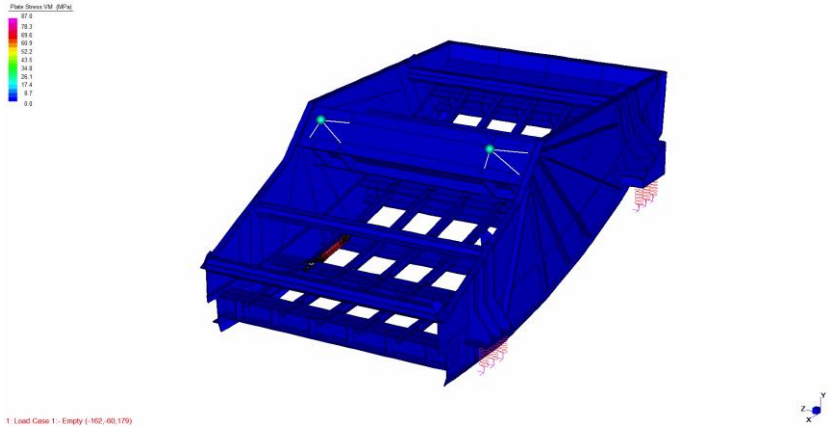

AVI Motion – ½ stroke

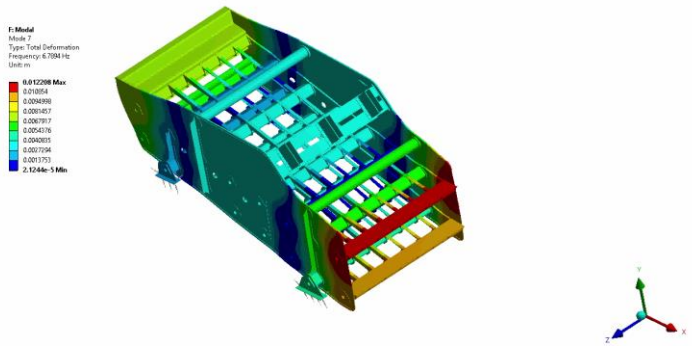

AVI Lateral bending mode

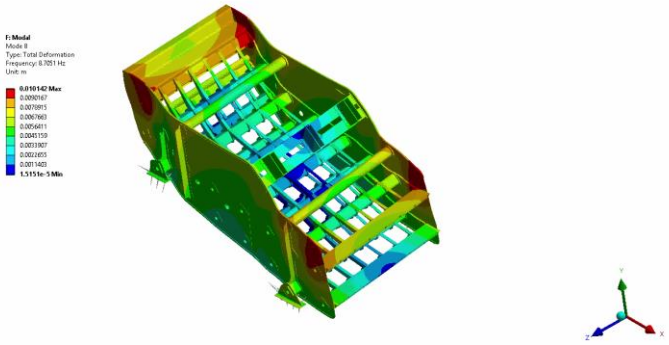

AVI Racking mode

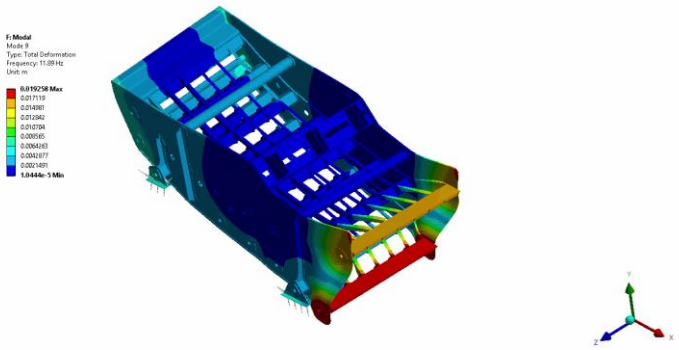

AVI Torsion mode

Case Study 2 – Vibrating Screens

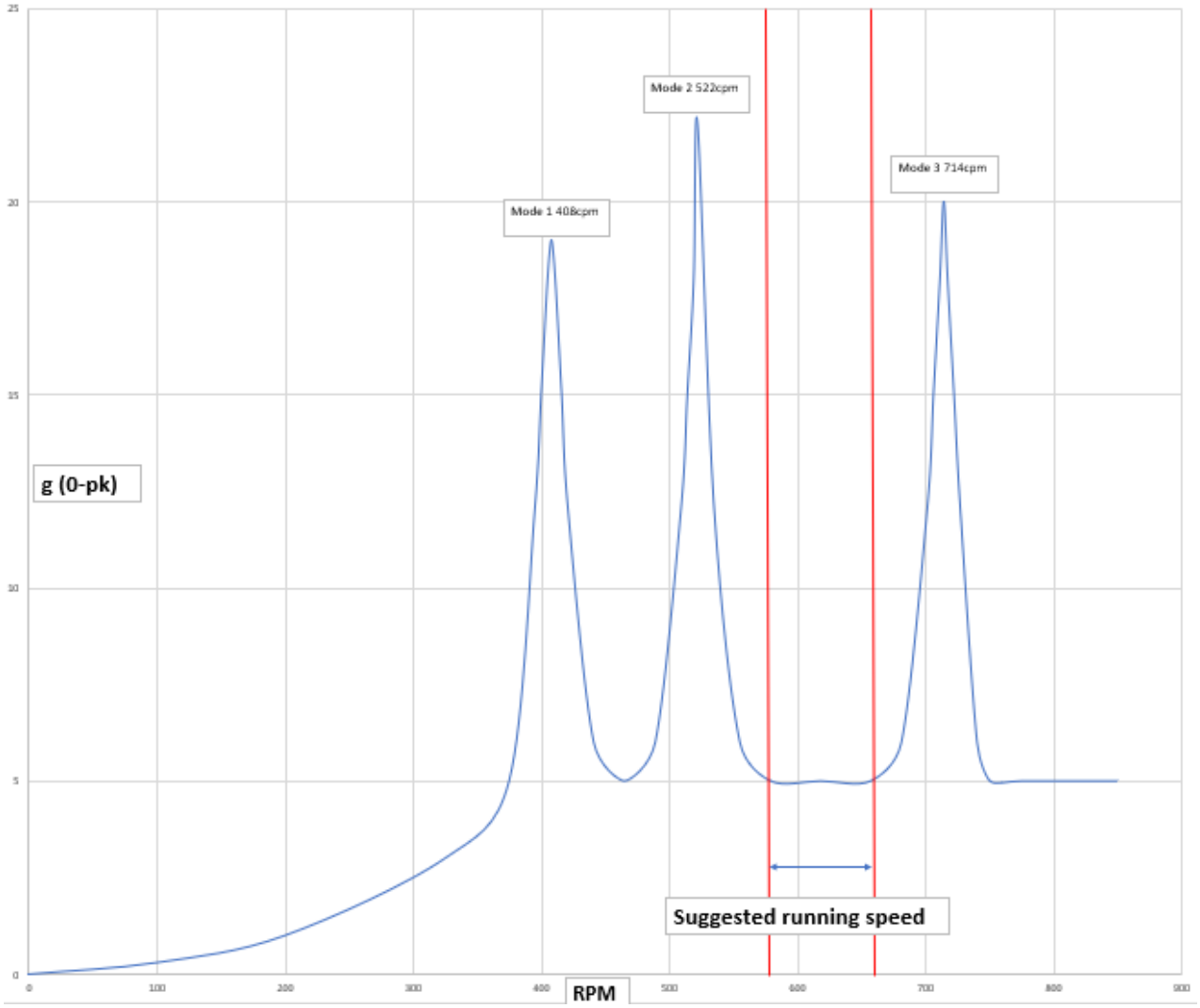

Non MO Group screen

From the 3 modes in the previous slides the suggested running speed range of the screen is shown, over laid on the probable frequency response plot. <u>If the screen runs at or close to any of these mode frequencies, fatigue cracking within hours is likely.</u>

Case Study 2 – Vibrating Screens Late 90s

Non MO Group screen

Longitudinal Stringer and Cleat Issues

Case Study 2 – Vibrating Screens

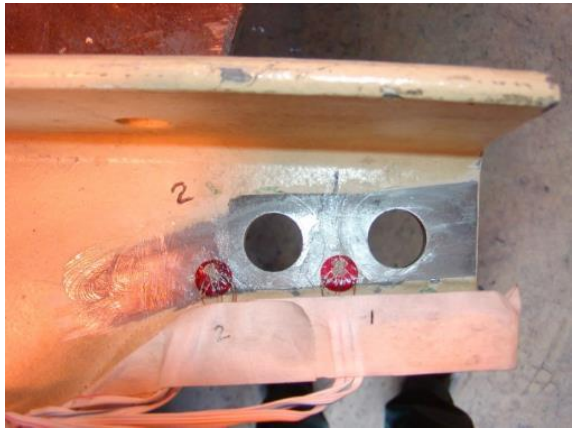

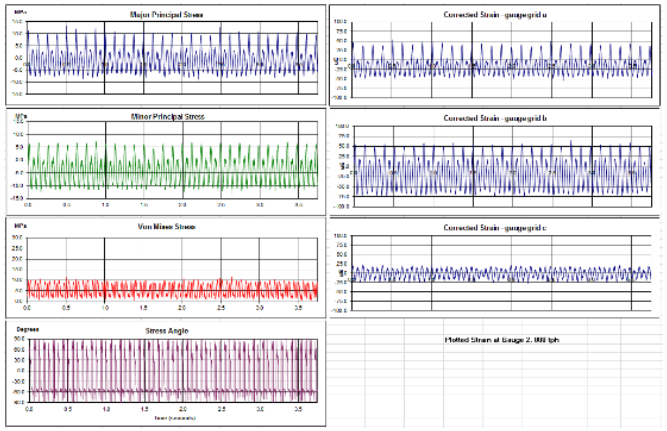

Non MO Group screen

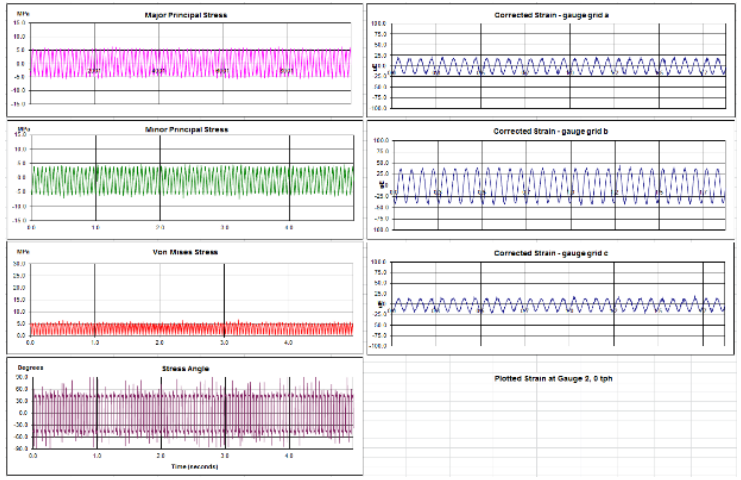

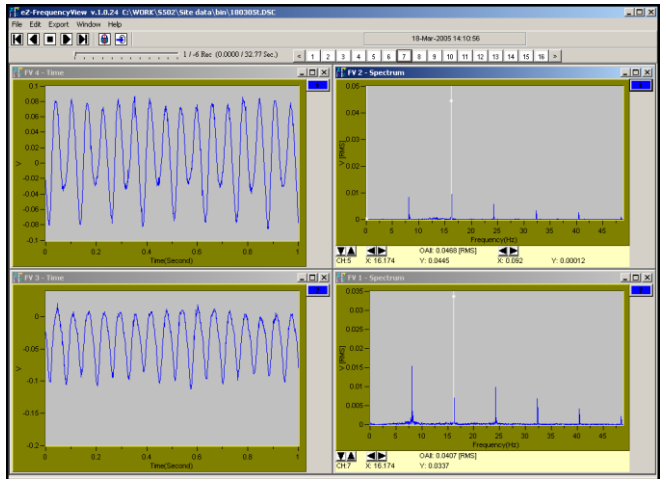

At high throughputs ½ orders are created - doubling the cycles per unit time

Fatigue design philosophies

Fail-Safe design

Fail-safe design requires that if one part fails, the whole structural system does not fail.

Fail-safe design recognises that fatigue cracks may occur and structures are arranged so that cracks will not lead to failure of the structure before they are detected and repaired.

Fail-safe design inherently requires designs which included multiple load paths, load transfer between members, crack stoppers built at interval into the structure, and inspection at suitable intervals and with appropriate methods and cover.

Damage-Tolerant Design

The damage-tolerant design philosophy is a refinement of the fail-safe philosophy.

It assumes that fatigue cracking may occur, but regular planned inspections at suitable intervals and with appropriate methods and cover will be completed through the design life so that the cracking will not grow to unacceptable size before repairs are completed.

The verification that a structure is damage tolerant requires the demonstration that the structure can sustain fatigue cracking without failure until such time as the cracking is detected. When fatigue testing is employed as a part of the verification and validation procedure, the failure criterion of the tests should be chosen to reflect the influence of the type of loading and the operation conditions of the actual structure.

Fatigue design philosophies

Safe life design

The safe life design approach is based on the use of standard lower-bound fatigue endurance data and an upper bound estimate of the fatigue loading. It therefore provides a conservative estimate of fatigue strength and does not necessarily depend on regular in-service inspection for fatigue damage.

Safe life design includes designing for finite life. The safe life must include a margin for the scatter of fatigue resistances at joints, for variable loading amplitudes in operation, and other unknown factors.

The procedures and design data included in BS7608:2014 are primarily intended for use in safe life design so that a suitable level of reliability and durability results.

Design for inspection and maintenance

Since fatigue performance is highly variable there is always some risk of fatigue cracking developing. Where fatigue failure consequences are severe, it is necessary for suitable inspections to be carried out with a view to detecting any fatigue cracks which might develop, before they reach critical size.

Hence a major issue for design is whether critical locations are accessible for inspections including NDT testing, and maintenance. Ideally all such locations would be readily accessible and the overall fatigue design process must include suitable inspection access means – hatches, covers etc. Obviously these must not cause a fatigue initiation site themselves – for their own structure or the machine surrounding structure.

Case Study 3, 4 – Centrifugal Fans

Centrifugal fans used across all industry spheres, including;

- Power generation
- Steel and sugar mills
- Mine ventilation
- Process situations

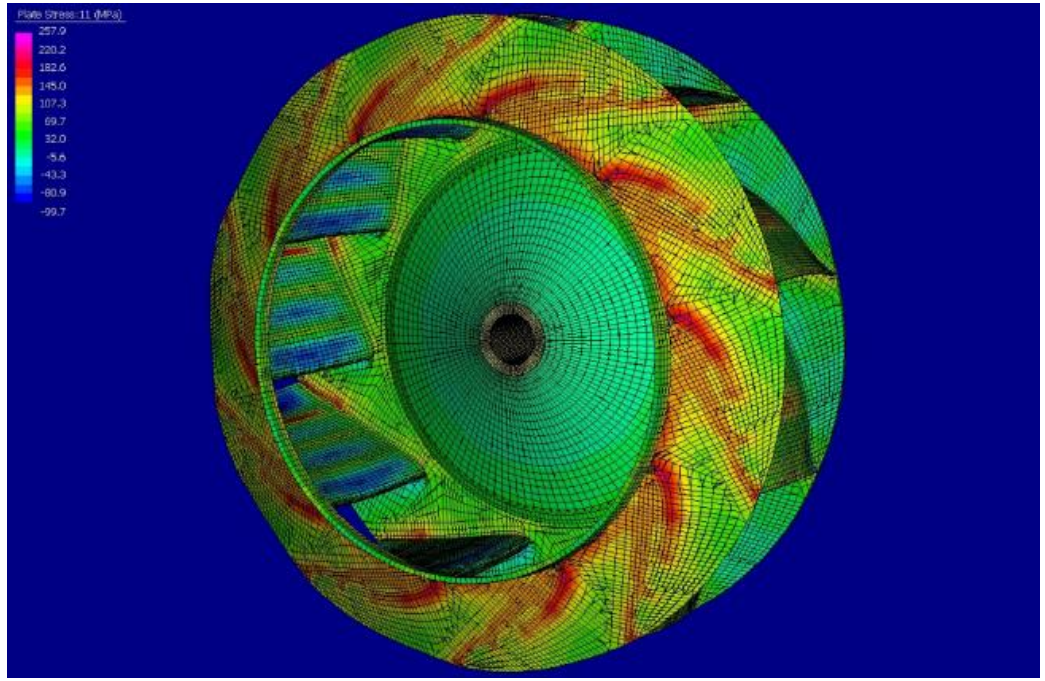

- Generally a very robust machine element
- Be careful of excessive width designs and the stress range caused by rotation through gravity
- Failure can also occur due to resonance caused from unexpected excitations
    - Poor flow conditions
    - Transients during start-up

Case Study 3, 4 – Centrifugal Fans

Typical example - 4m diameter double inlet sugar mill boiler draught fan, rotating at 500-700rpm (turbine drive).

Strain gauging was used to determine the root cause of problems.

Larger than normal wear plates were added as an in-service modification, with the additional weight overloading the fan. Other issues with variable speed fluctuations of turbine drive creating unexpectedly high cumulative fatigue stress ranges.

Case Study 3, 4 – Centrifugal Fans

Wide (higher flow), normal and narrow (higher pressure) centrifugal fan geometries

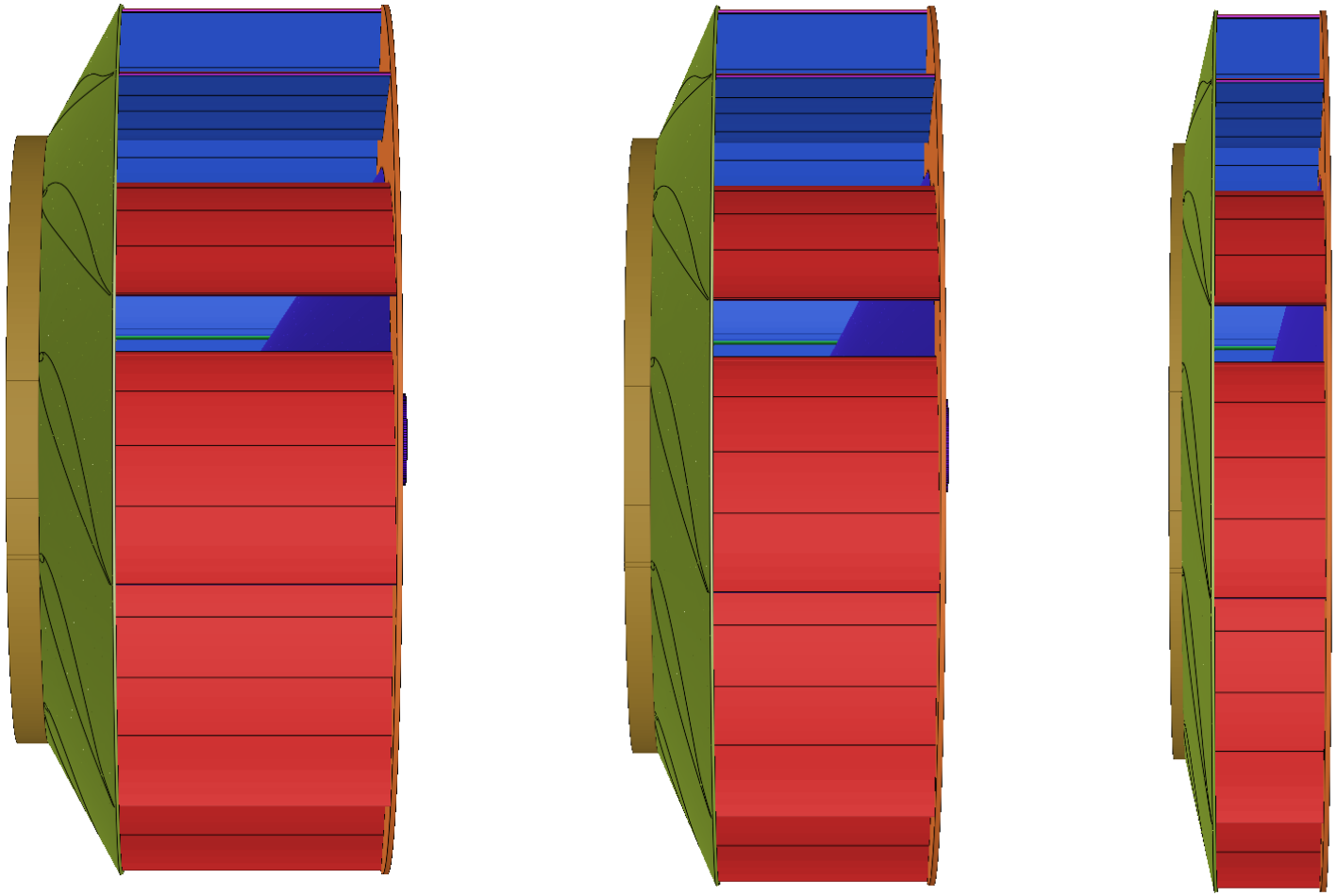

Wide geometry – check for stress range caused by rotation through gravity

Narrow geometry – check for too low in frequency disc and umbrella mode natural frequency modes which can be too readily excited especially at start-up. Disc mode below.

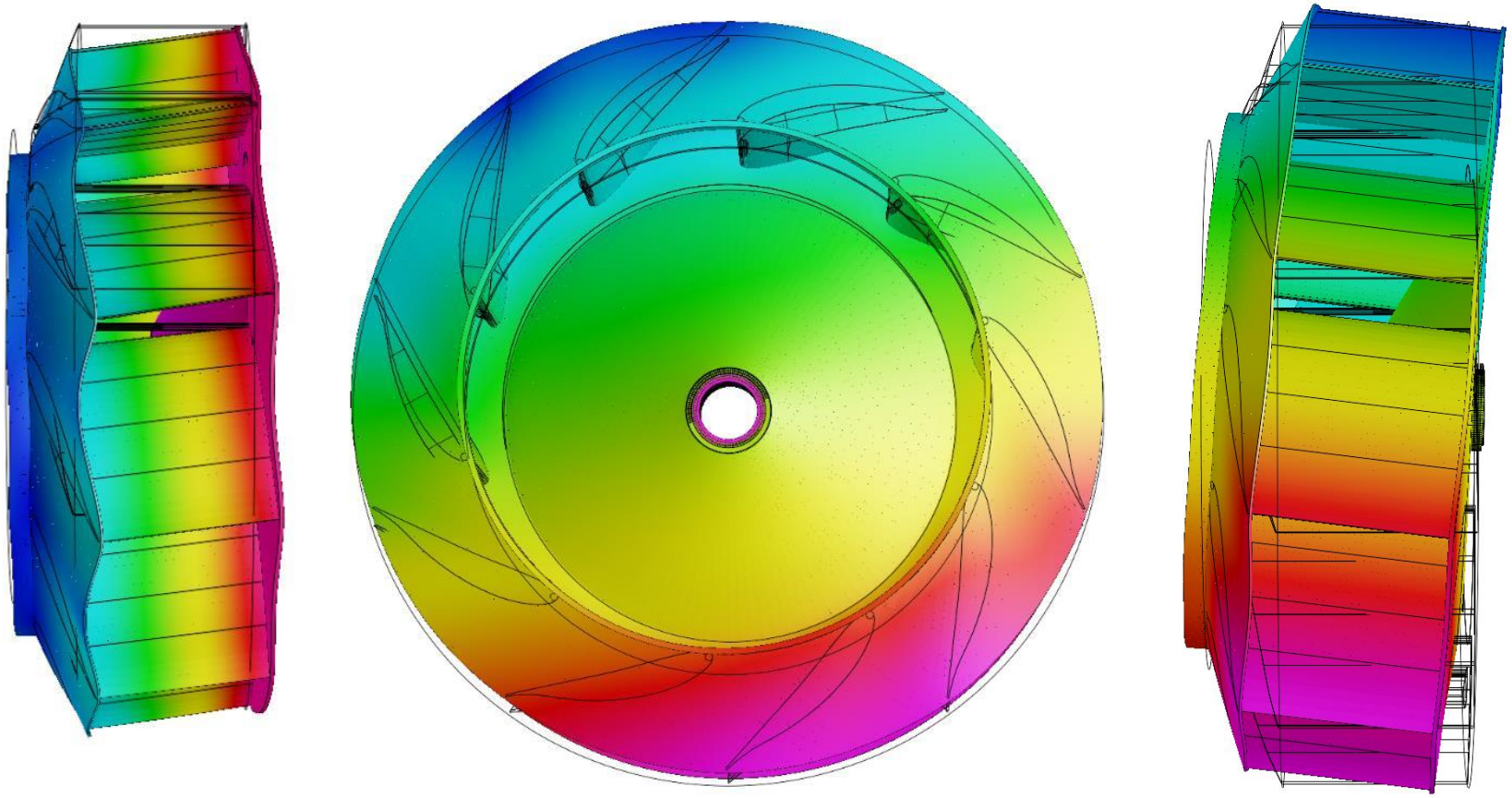

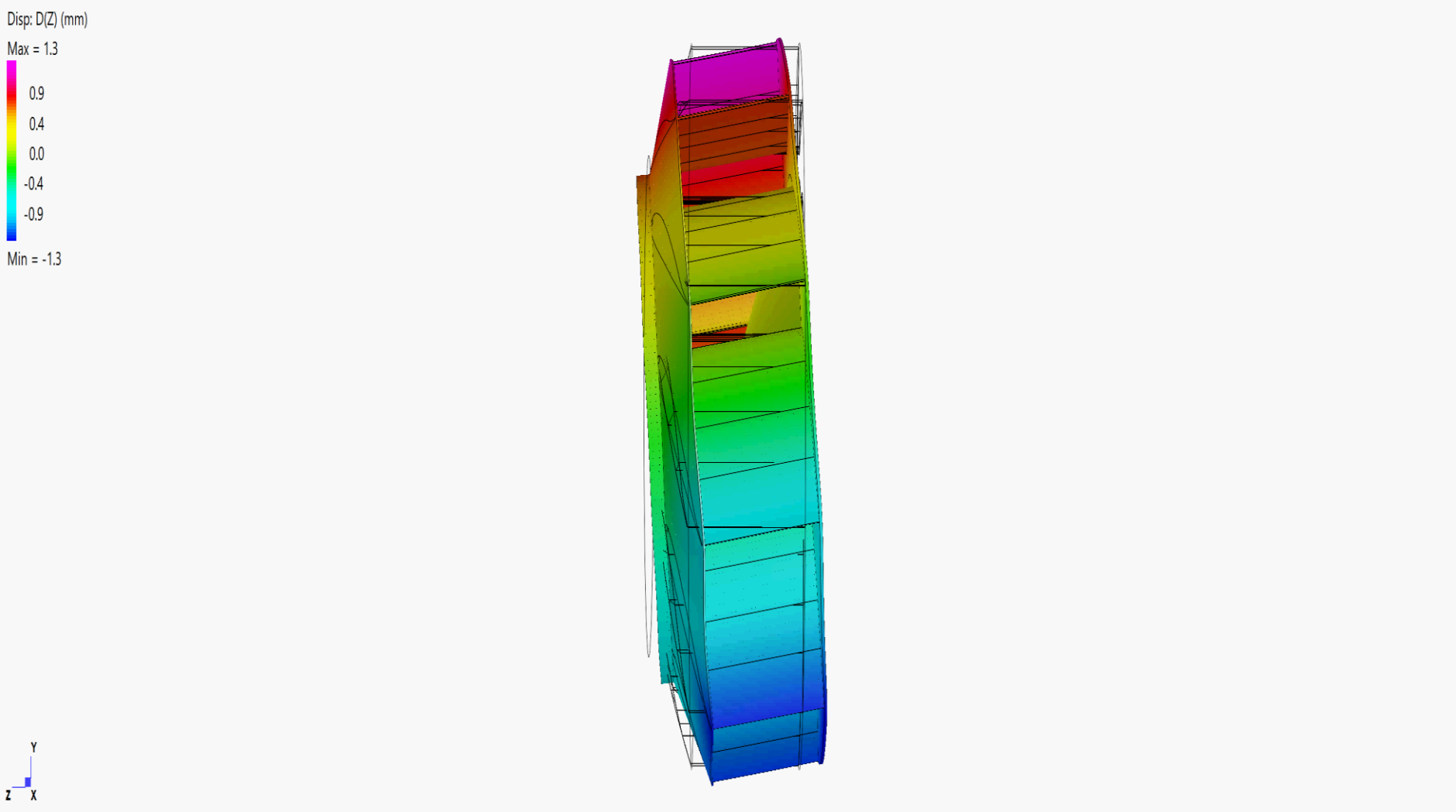
Disp: D(Z) (mm)
Max = 1.3
0.9
0.4
0.0
-0.4
-0.9
Min = -1.3
Y
Z
X

General fatigue design recommendations

1. Design the mechanical structure as a whole so as to provide easy paths for loads and stress flow. Avoid gross discontinuities by using gradual changes of section. Ensure that sudden changes of stiffness and rigidity are not designed in. Ensure suitable structural continuity.

2. All welds inherently produce stress concentrations. The use of welds must be minimised as much as possible. Wherever possible, welds should be positioned at geometrical locations of low fatigue stress.

3. Select welded joint designs on the basis of providing the easiest possible stress path through them. Full penetration butt welds must be used in preference to load carrying fillet welds.

4. All welding must be completed to the AS1554.5 standard (Ref 14) which includes the FP (fatigue purpose) weld category. This weld category must be planned and used about the machine.

5. Be aware that in a welded fabrication there is no such concept as a “secondary weld”. Welded brackets, that remain in the completed product could provide sites for fatigue cracking and should therefore be assessed.

6. Similarly welding support brackets for ancillary items without consideration of the resultant significant reduction in fatigue resistance of the weld compared to the previous parent material at the location, must be avoided where at all possible. Large truck frames have suffered numerous fatigue cracking failures due to this issue.

7. Structural joints must avoid eccentricities and misalignments, which induce secondary bending stresses.

General fatigue design recommendations

8. One of the most important parameters in the magnitude of the stress concentration at any given type of joint is the weld shape. Arrange the design in such a way that critical welds can be well accessed and made in the most favourable position, and minimise site welding so that weld quality is not potentially reduced, and thermal stress relieving can be completed to reduce residual stresses.

9. This also applies to local stresses at coping holes - see the standard clause B.6 and Figure B.8.

10. Slotted connections and penetrations through stressed members should be avoided wherever possible – see the standard Clause B.8 and the text therein.

11. Clause B.5 of the standard outlines potential issues of transverse butt welds made with permanent backing strips. Temporary ceramic backing strips are available which can alleviate this potential.

12. Plug, slot and infill type welds should be avoided if possible. Where they are used the standard Clause B.5.2.3 comments on their categories.

13. Butt welded joints from one side only should be avoided where possible – clause B.5.2.4 comments on these including root flaw issues. As above temporary ceramic backing strips (Gullco) can result in a far better weld finish on the inaccessible side.

General fatigue design recommendations

14. Clause B.7.2 details potential issues with cruciform joints, and the use of continuity plating (web gussets) to reduce stress concentrations. These must be used where needed.

15. Post weld improvement techniques must be used where relevant. See Annex F of the standard and the later section of this document. Clause 13.2 of the standard notes the detail types that are suitable for application of the techniques described in Annex F. Critically, for weld grinding / profiling treatments it is mandatory that weld throats are not reduced unacceptably – the laying of oversize welds must be considered.

16. Clauses 14.2 and 14.3 of the standard summarises quality aspects detrimental to fatigue. The design process must ensure that such aspects are avoided.

17. Fatigue of parent material – rare except at bolt holes or poor geometry transitions.

18. Design for all load cases – normal, upset, lateral, installation, maintenance. Eg see:
    AS 4324.1:2017 Mobile equipment for continuous handling of bulk materials. General requirements for the design of steel structures.

Case Study 5 – Axial fan resonance cantilever bending late 80s

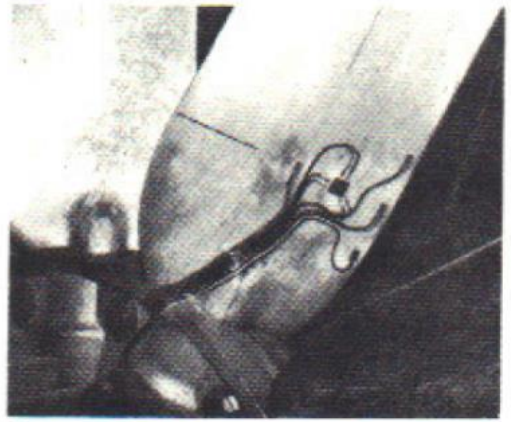

Figure 1 *Strain gauge installation on the leading face of a blade of an axial fan, showing single axial and rosette gauges, and the lead wires running over the hob and backplate of the fan to the radio telemetry instrumentation.*

Fatigue cracking at gauge / marked line blade location due to cantilever bending mode

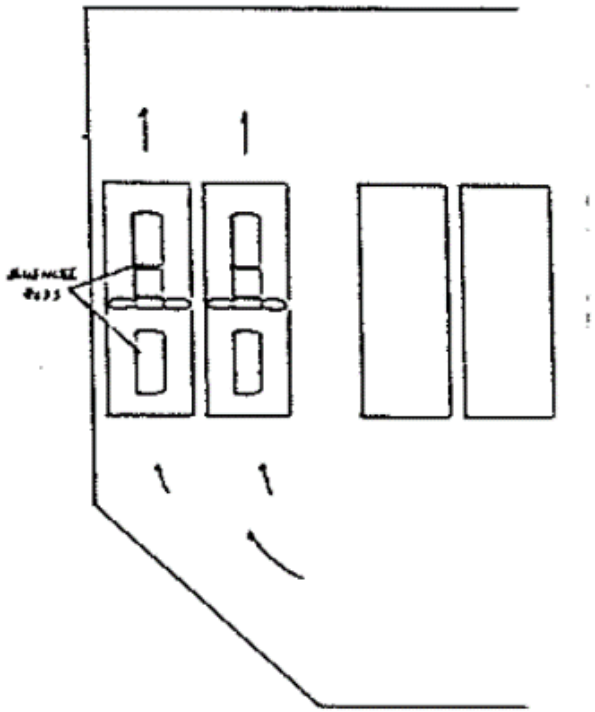

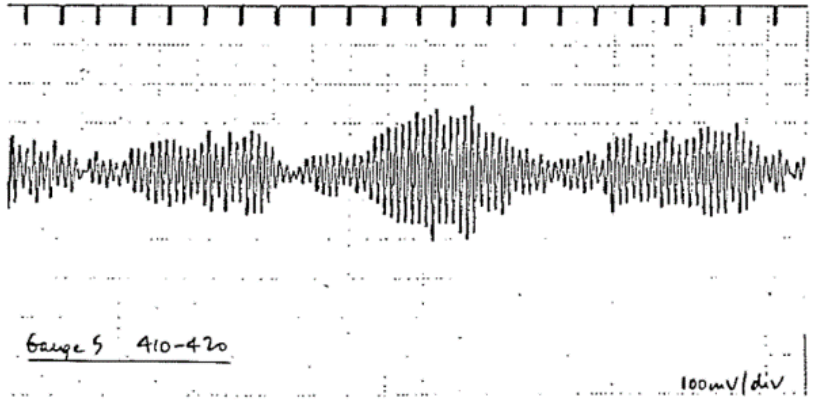

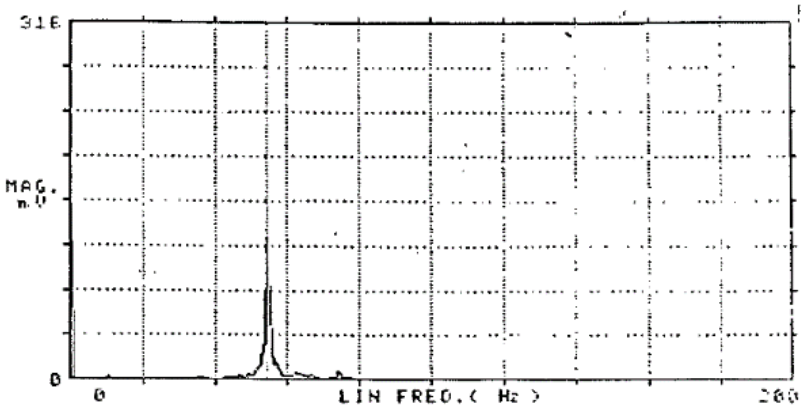

1988 Axial cast aluminium blade air conditioning system fan. Variable speed, poor upstream ducting, resonance caused blade cracking during some operating speeds.

Return air axial fan pairs.
Strain gauges applied to a blade – to telemetry eqt.
Time waveform and spectrum at medium speed – as expected

Case Study 5 – Axial fan resonance cantilever bending

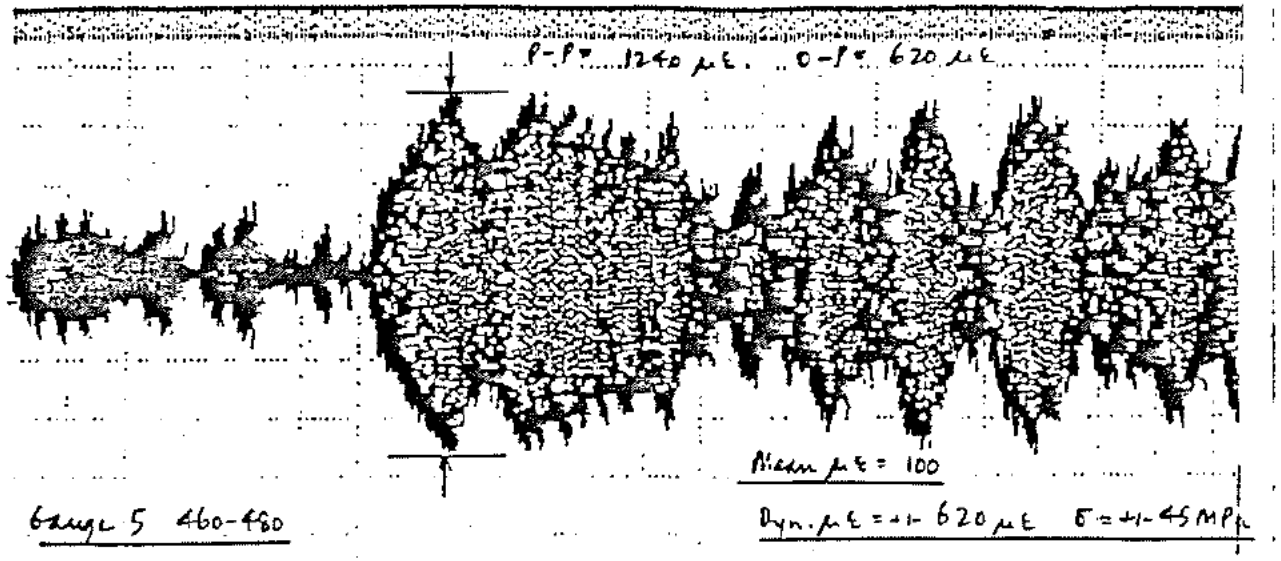

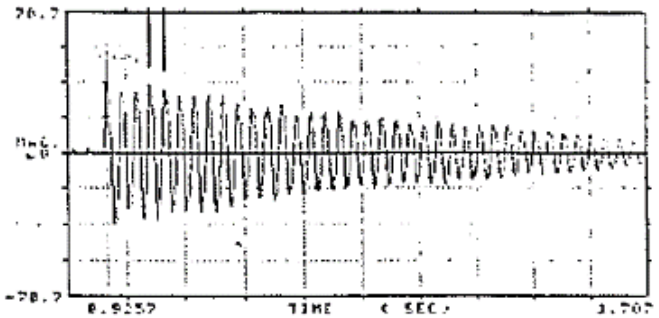

Time waveform at higher speed – virtually pure resonance created, alternating stress way over fatigue limit. Little damping in fan.

1. Nothing wrong with the fan impeller / blades. But OEM should have advised of the blade cantilever bending natural frequency and ensure no resonance in operation. Expect if the OEM was shown the drawings of the installation ducting then alarm bells would have rung.
2. Removal of silencer pods from fan ductwork.
3. Addition of inlet flow guide vanes to direct flow around the corner into the ducting.
4. Addition of flow straightener vanes in the ducting.
5. Addition of fairing dome to impeller hub.
6. Optimisation of control system governing operation of the fan pairs, and avoiding large speed differences within the pair.

Fatigue Design Verifications – FEA and Fatigue Analysis to BS7608

For FE mesh using solid elements – should be straightforward but don't use a fused mesh at contact areas – must use a gap and compression only contact elements to ensure weld stresses are valid.

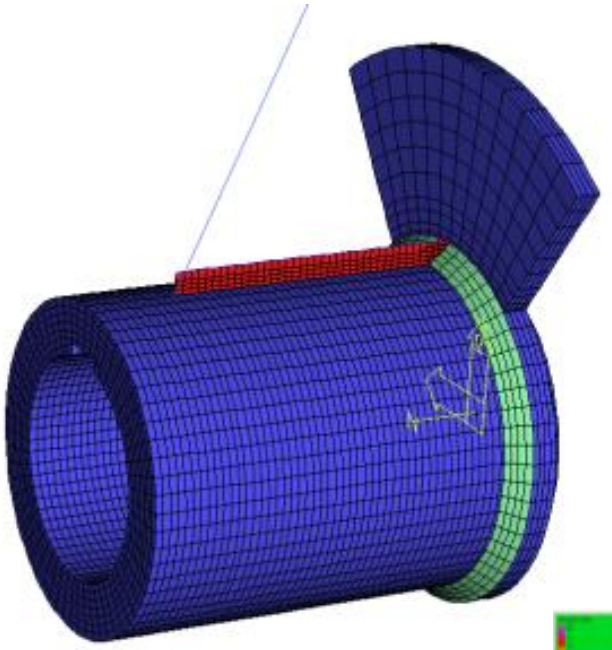

For example centrifugal fan backplate to hub region – fillet welds each side.

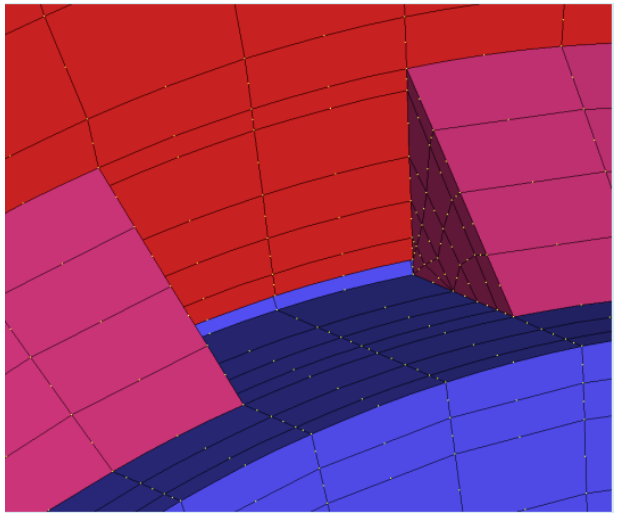

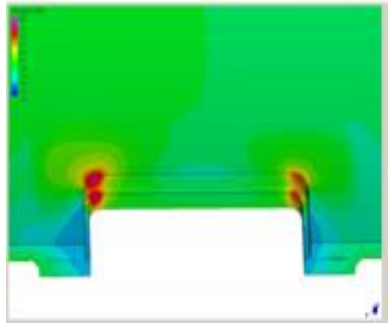

Inside manhole at BDC – major principal stress – overall bending.

Fatigue Design Verifications – FEA and Fatigue Analysis to BS7608

For FE mesh using shell/plate elements only – must simulate welds in accordance with codes to provide the valid hot spot stress to use in fatigue analysis. The below and next 6 slides from Ref 29, 30, 31.

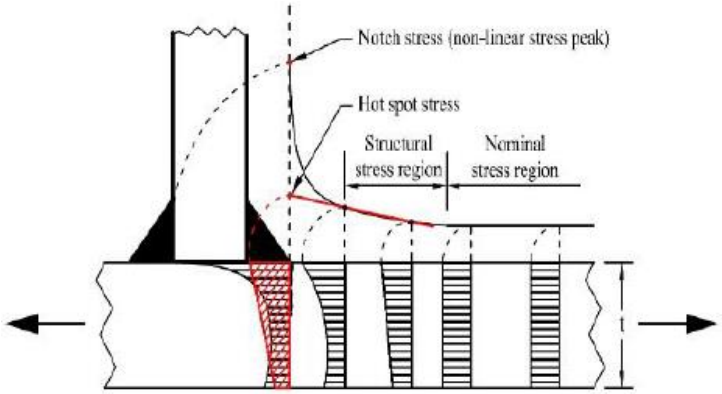

Figure 1: Stress Distribution In Welded Joints.

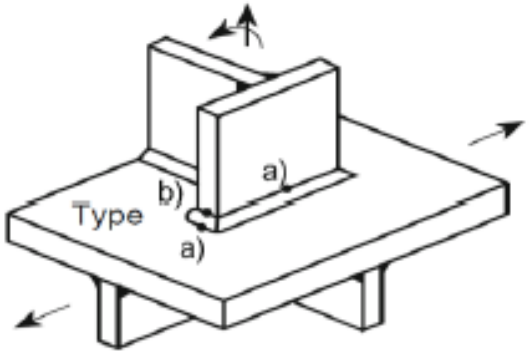

Figure 2: hot spots.

Figure C.2 **Types of hot-spot**

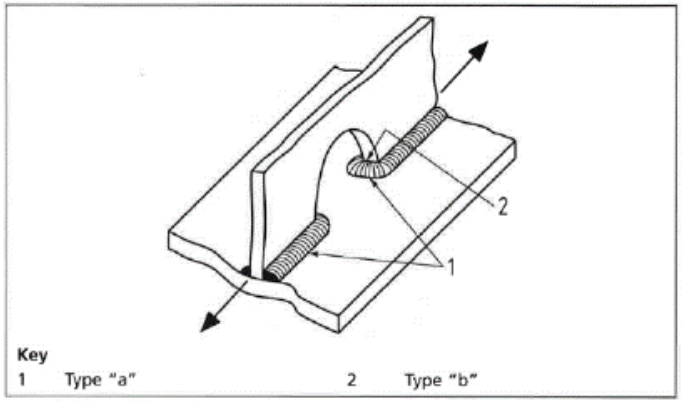

Type "a" Hot Spots

The structural hot spot stress σ_{hs} is determined using the reference points and extrapolation equations as given below.

Fine mesh with element length not more than 0.4 t at the hot spot: Evaluation of nodal stresses at two reference points 0.4t and t, and linear extrapolation

$\sigma_{hs} = (1.67 \times \sigma_{0.4t}) - (0.67 \times \sigma_t)$

Fatigue Design Verifications – FEA and Fatigue Analysis to BS7608

Type "b" Hot Spots

The stress distribution is not dependent on plate thickness. Therefore, the reference points are given at absolute distances from the weld toe or from the weld end if the weld does not continue around the end of the attached plate.

$$\sigma_{hs} = (3 \times \sigma_{4mm}) - (3 \times \sigma_{8mm}) + (\sigma_{12mm})$$

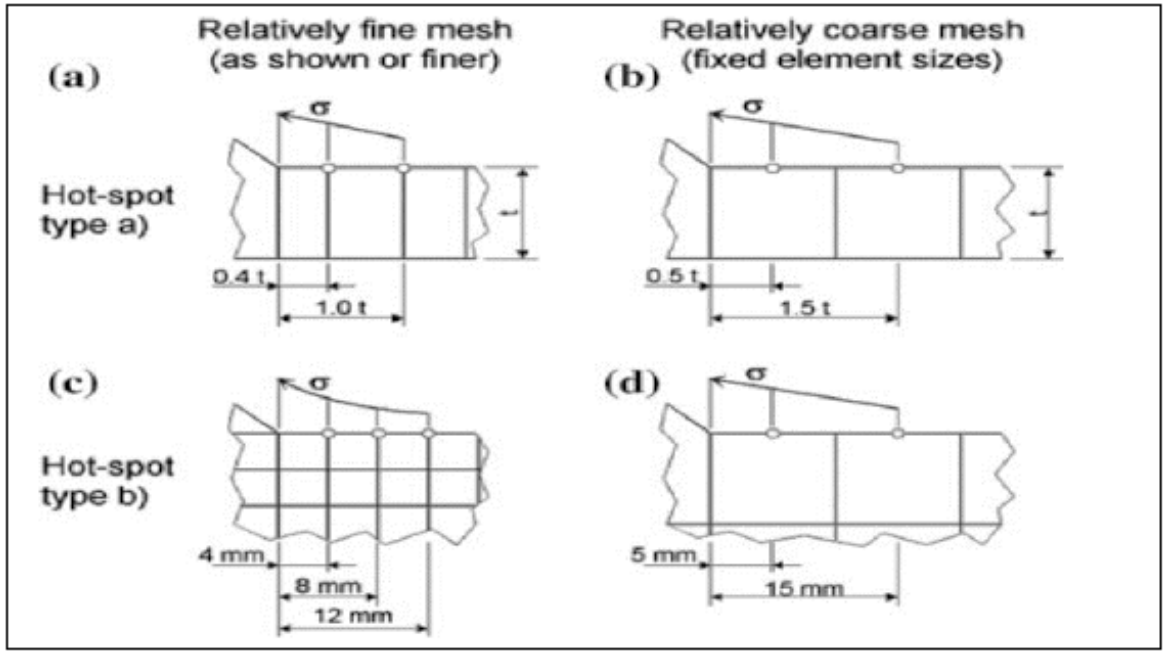

Figure 3: Linear Extrapolation Paths

Fatigue Design Verifications – FEA and Fatigue Analysis to BS7608

For experimental test

The recommended placement and number of strain gauges depends on the extent of shell bending stresses, the wall thickness and the type of structural stress.

For type 'a' hot spot

The center point of the first gauge, whose gauge length should not exceed 0.2t, is located at a distance of 0.4t from the weld toe.

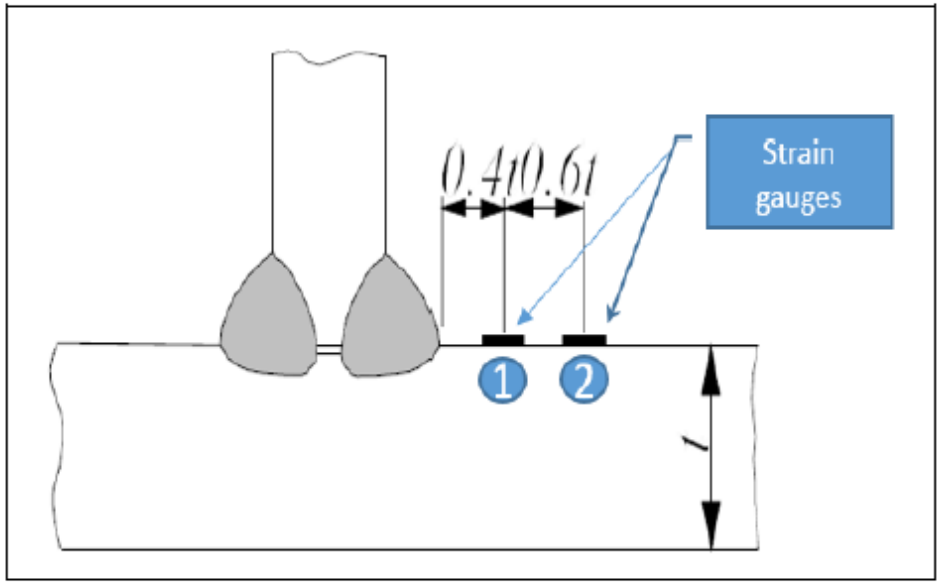

Figure 4: Strain gauges for extrapolation

Fatigue Design Verifications – FEA and Fatigue Analysis to BS7608

It is unknown why BS7608 and the IIW codes do not show actual FE meshes of shell/plate modelling.
Glinka (Ref 30) details such meshes well. The below schematic (Ref 29) has been formed from the BS7608 text.

WELD MODELING TECHNIQUES

A. Glinka Model (Glinka)

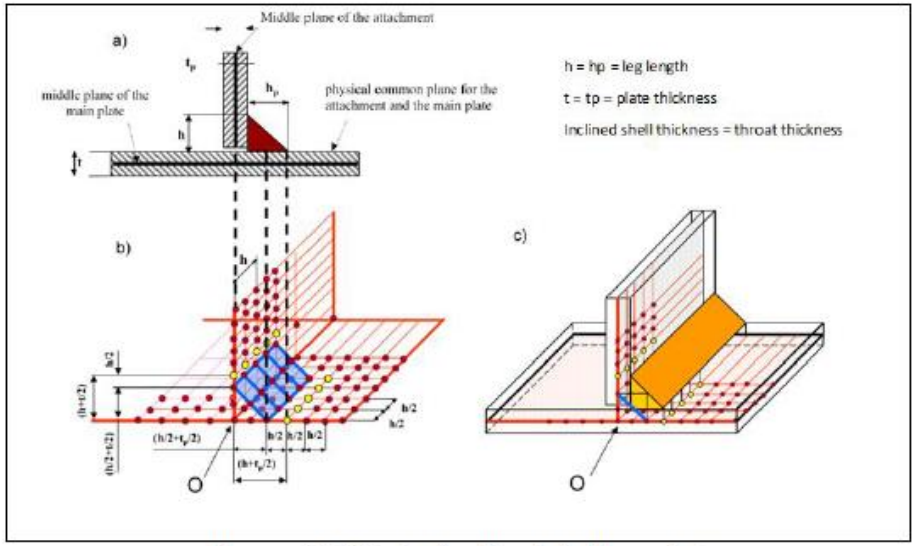

Figure 5: Glinka Inclined shell model.

B. BS 7608:2014 Inclined shell (BS)

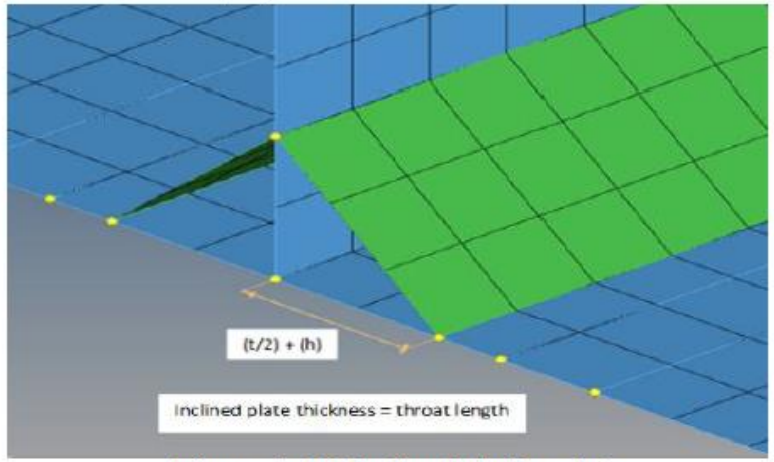

Figure 6: BS inclined shell model

The incline shell is placed as per geometry. The thickness of inclined shell is equal to throat length[1]

Fatigue Design Verifications – FEA and Fatigue Analysis to BS7608

C. Increased thickness (IT)

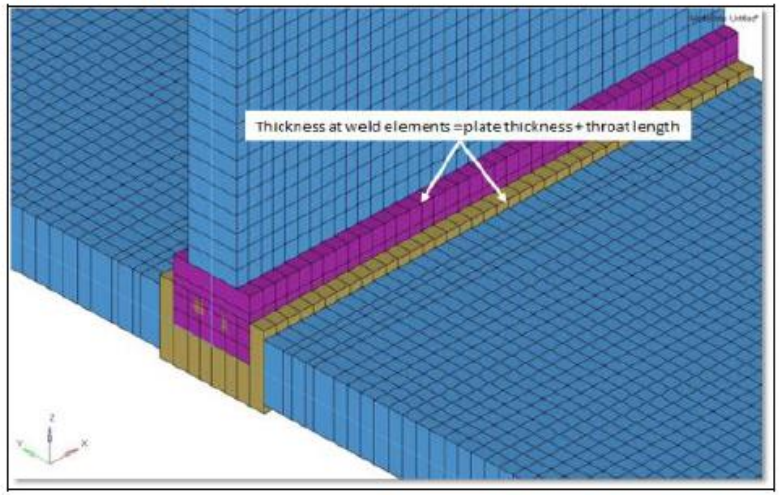

Figure 7: BS increased thickness model

Here no additional shell elements are used to model weld. Instead, element thickness at weld region is increased by throat length.[3]

D. NAFEMS no weld model (NW)

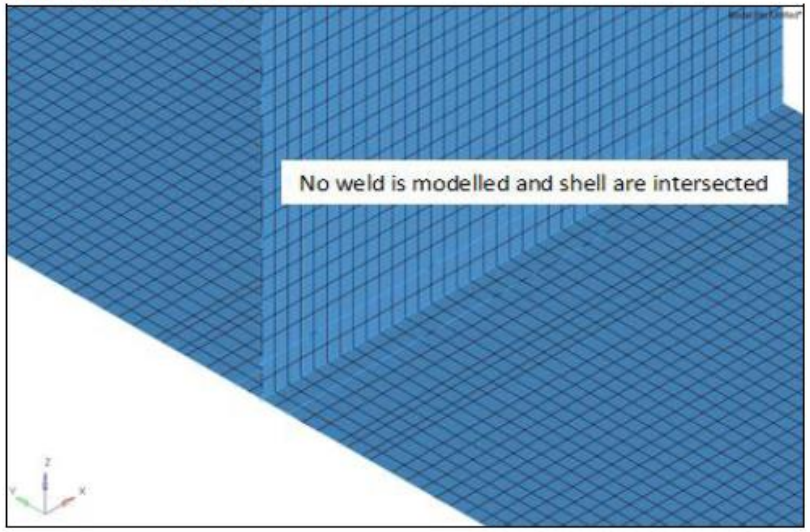

Figure 8: NAFEMS no weld model.

This is simplest way to model, where plates are directly intersected without specific modeling of weld [5]

Fatigue Design Verifications – FEA and Fatigue Analysis to BS7608

E. NAFEMS Solid model

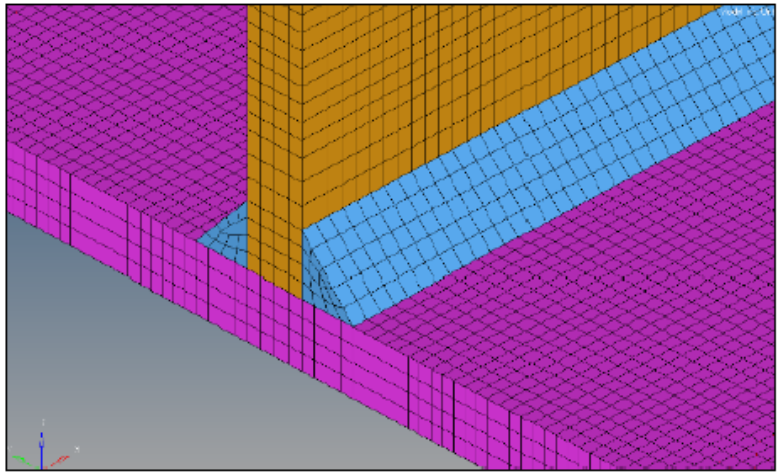

Figure 9: NAFEMS solid model

Weld joint is modeled by using solid elements.[5]

Table VII: Stress results in MPa for bending load case.

Modeling technique	At 0.4t	At t	Hot spot stress by extrapolation
Solid	178	166.5	185.71
NAFEMS no weld	173	162	180.37
Glinka inclined	175	164	182.37
BS inclined	177	166	184.37
Increased thickness	178	167	185.37

The HSS results in Ref 29 are all similar. However this is for a relatively basic weld joint geometry.

Fatigue Design Verifications – FEA and Fatigue Analysis to BS7608

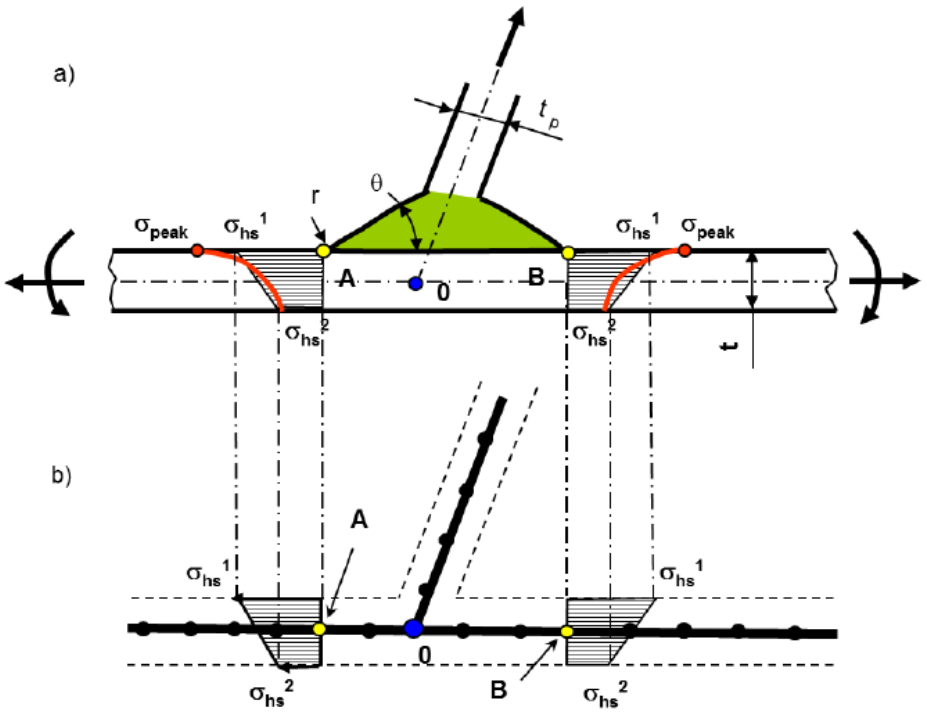

Fig. 6. A welded joint and its simple shell finite element model; a) welded joint and stress distributions in critical cross sections, b) shell finite element model and resultant stress distributions.

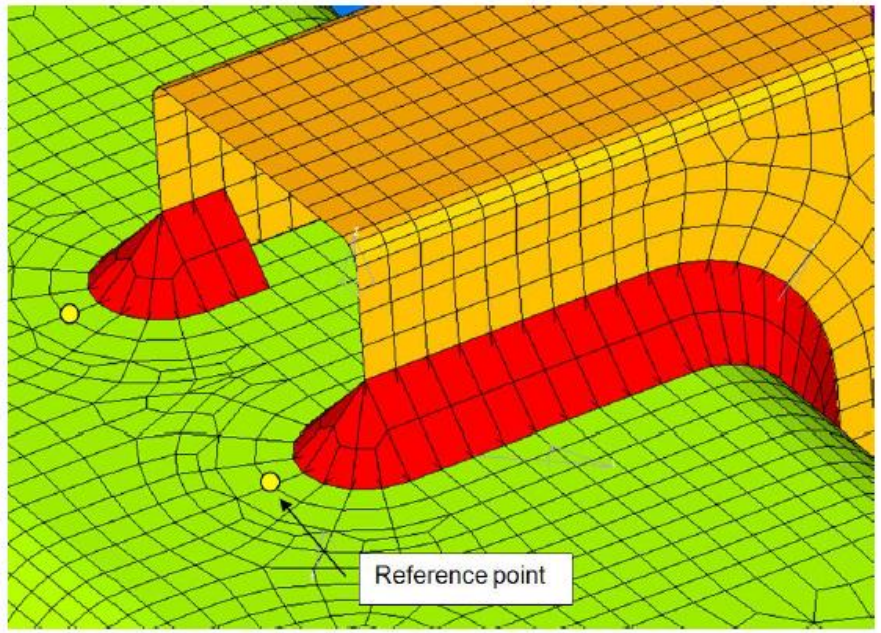

Fig. 15. Details of the shell FE model and the location of the reference point for the determination of the hot spot stress

Glinka (30) shows a “no weld meshed” joint as well as a more complex geometry of tubular hollow sections. The paper details the short comings of the “no weld mesh” joint.

Fatigue Design Verifications – FEA and Fatigue Analysis to BS7608

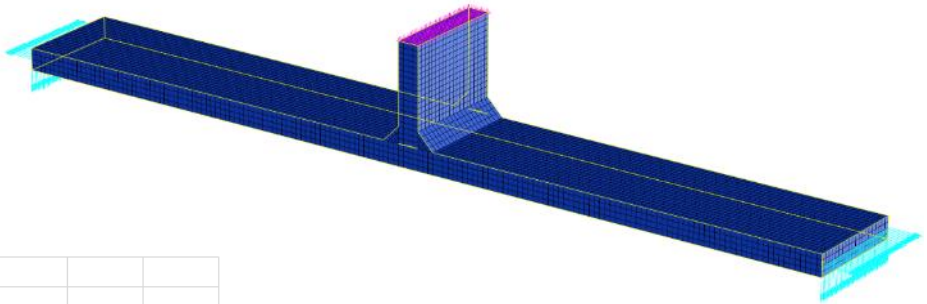

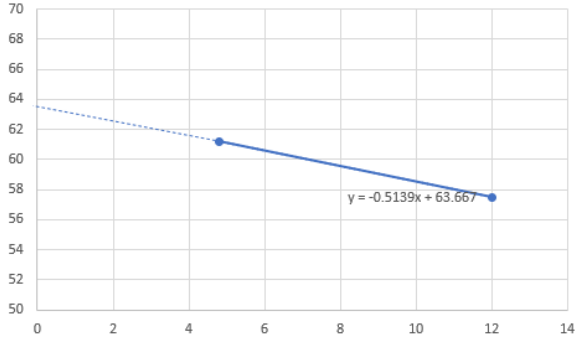

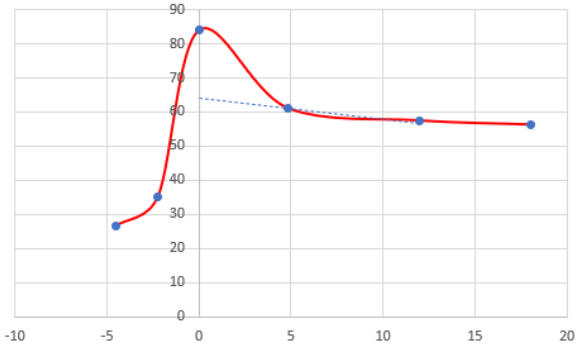

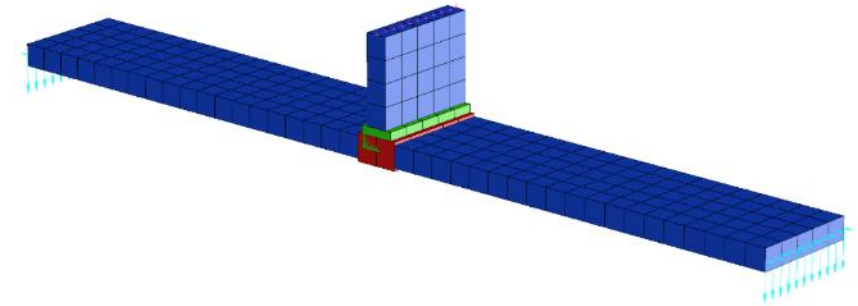

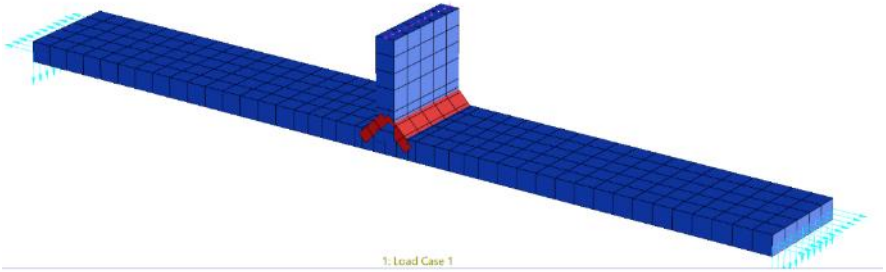

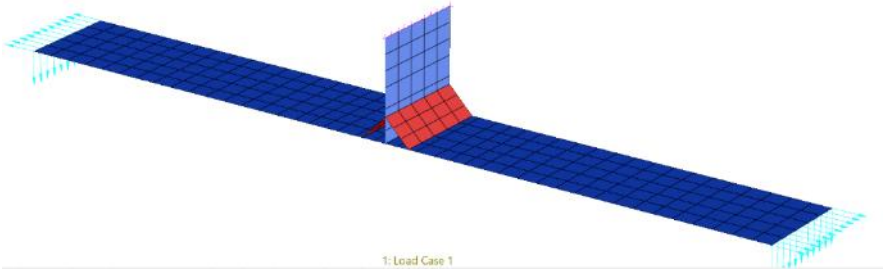

It is highly recommended that you form up your own mesh examples of the three main methods.

Fatigue Design Verifications – FEA and Fatigue Analysis to BS7608

For load carrying fillet and t-butt welds use joint types 7.2 and 7.4 D class which is 53MPa for the design (97.7% survival) HSS at 10^7 cycles.

Table 7 **Classification of details: load carrying fillet and T-butt joints [A] between plates [B]**

Type no.	Product form	Location of potential crack initiation	Detail	Manufacturing requirements	Special treatments or requirements	Design stress area	Class: Nominal stress	Class: Hot-spot stress	Thickness and bending correction (see 16.3.2)	Notes	Sketch
7.1	Rolled steel plates, sections and built-up members	At weld toe in member X	Weld joining two members end to end with third member transverse through joint. Member Y can be regarded as one with a non-load-carrying weld (see joint type 4.2 or 4.3).	Full penetration butt weld with longitudinal axes in line.	Any undercut should be ground smooth particularly on the corners of member X. If width permits make weld continuous around the joint; otherwise grind ends flush with edge of member X. All regions of plate Y stressed in the through thickness direction to be free from lamellar defects and tears. Weld toe improvement techniques applicable but note need to assess partial penetration welded joints with respect to potential failure through the weld throat (see type 7.8)	Cross section of member X at weld toe. Allowance should be made for any misalignment of the joint exceeding that already allowed for in the classification (see B.7.2 and B.5.2.1). In some circumstances (see B.7.2) it might be necessary to include a stress concentration factor in the nominal stress design calculation.	F	D	Applicable assuming t_{eff} = thickness of plate X and b = 0.25	Weld metal failure does not govern with full penetration welds.	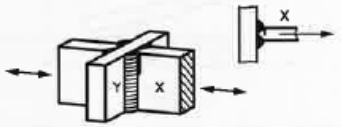
7.2				Partial penetration butt or fillet weld with longitudinal axes in line.			F2	D		In this type of joint failure is likely to occur in the weld throat unless the weld is made sufficiently large. (See joint type 7.8).	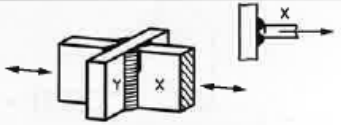
7.3			Weld joining the end of one member to the surface of another.	Full penetration butt weld made from one or both sides.		Cross section of member X at weld toe	F	D		See joint type 7.1.	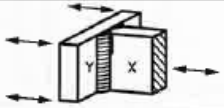
7.4			Member Y can be regarded as one with a non-load-carrying weld (see joint type 4.2 or 4.3).	Partial penetration butt or fillet welds made from both sides			F2	D		See joint type 7.2.	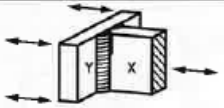

Fatigue Design Verifications – FEA and Fatigue Analysis to BS7608

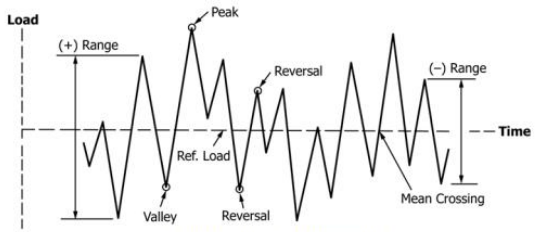

FIG. 1 Basic Fatigue Loading Parameters

$$D = \sum_{i=1}^{n_{bins}} \frac{n_i}{N_i} \qquad (5.3.3)$$

where, n_i is the number of repetitions of the cycle with stress range $\Delta\sigma_i$ in bin i. The calculation process is illustrated in Fig. 32.

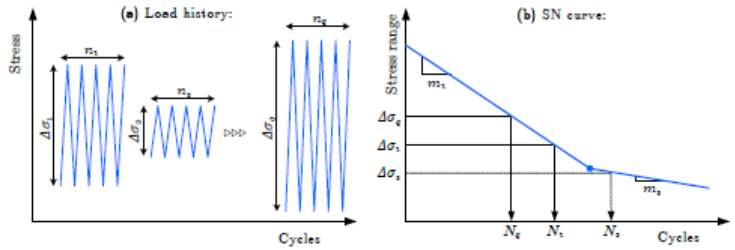

Figure 32: Loading blocks used for damage accumulation, after [39].

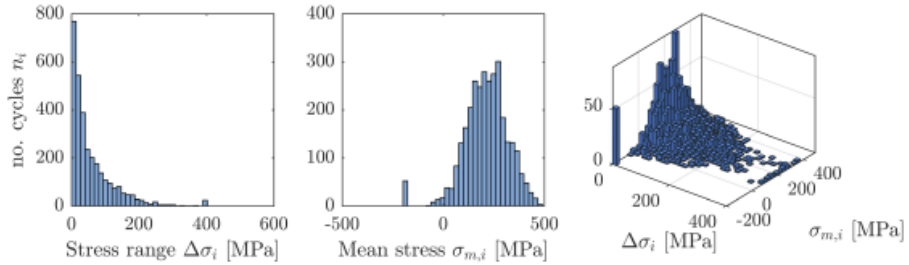

Ref 11

Ref 26

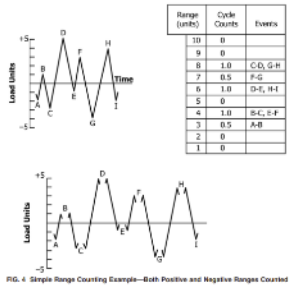

FIG. 4 Simple Range Counting Example—Both Positive and Negative Ranges Counted

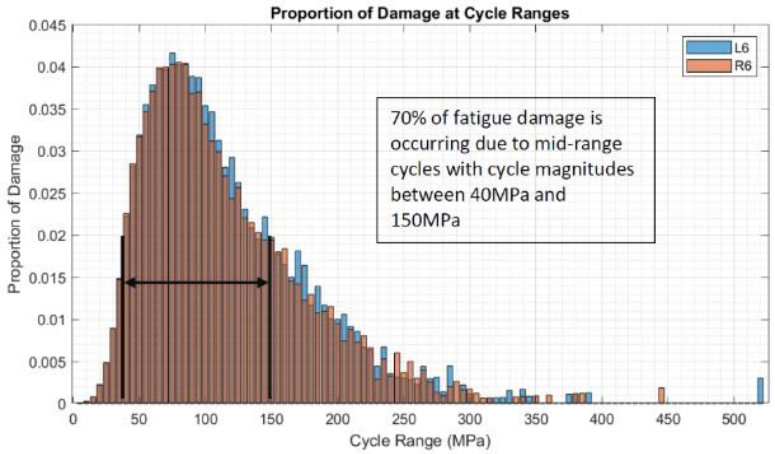

Damage histogram – left and right strain gauges

Complete rainflow counting to ASTM E1049 (26), construct cycle and damage histograms. Life is 1/D. Note that Cl 15.1 includes "for welded structures…mean stresses are not taken into account. Also see Cl15.4 for non-welded details where stress cycles are partly or wholly in compression

Fatigue Design Verifications – FEA and Fatigue Analysis to BS7608

Design verifications wrap up;

FE meshing shell/plate elements – recommend don't use "no weld" mesh – use additional thickness mesh initially to confirm plate thicknesses and weld sizes, and finish off (confirm final results) with inclined shell mesh.

BS7608 – see Cl 16.3 modifications to s-n curves; Thickness and bending, Temperature, Sea water.

Tubular node joints – slightly different criteria see Annex G Ref2.

Weld toe improvements – slide 50 and Annex F of Ref 2.

Bolts – recommend using VDI2230 (Ref 25), Mdesign software

Mean stress effects – Goodman, Morrow, SWT etc for parent material. See good summary; https://community.sw.siemens.com/s/article/mean-stress-corrections-and-stress-ratios

Weld root fatigue - References 33, 34 including weld size to reduce potential.

Stress relief – see good summary of the numerous benefits;

https://welding.org.au/wp-content/uploads/2015/07/TWI-Job-Knowledge-Heat-Treatment-Pt-1.pdf

Fatigue Design Verifications – FEA and Fatigue Analysis to BS7608

Engineering Institute of Technology.

Large Deformation Explicit Solver Simulations (Explosions, Impact, Structural Collapse) LS Dyna

Structural Collapse

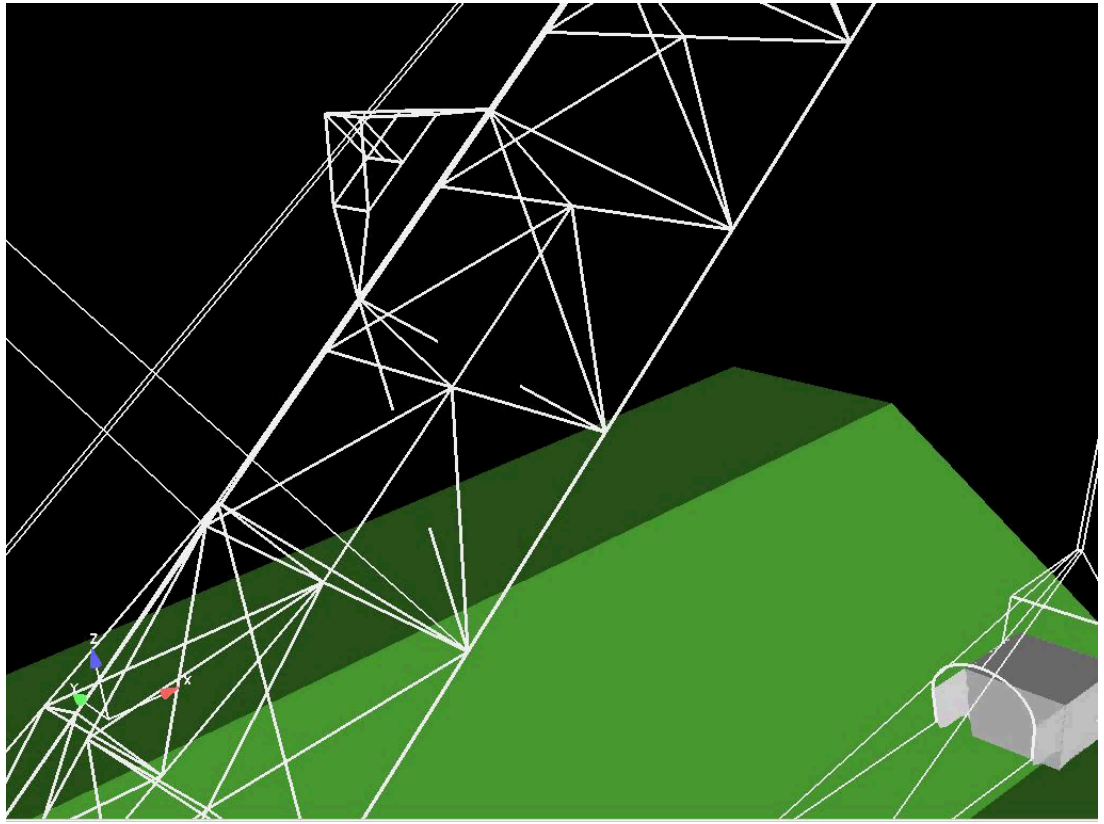

Impact & Crash Analysis

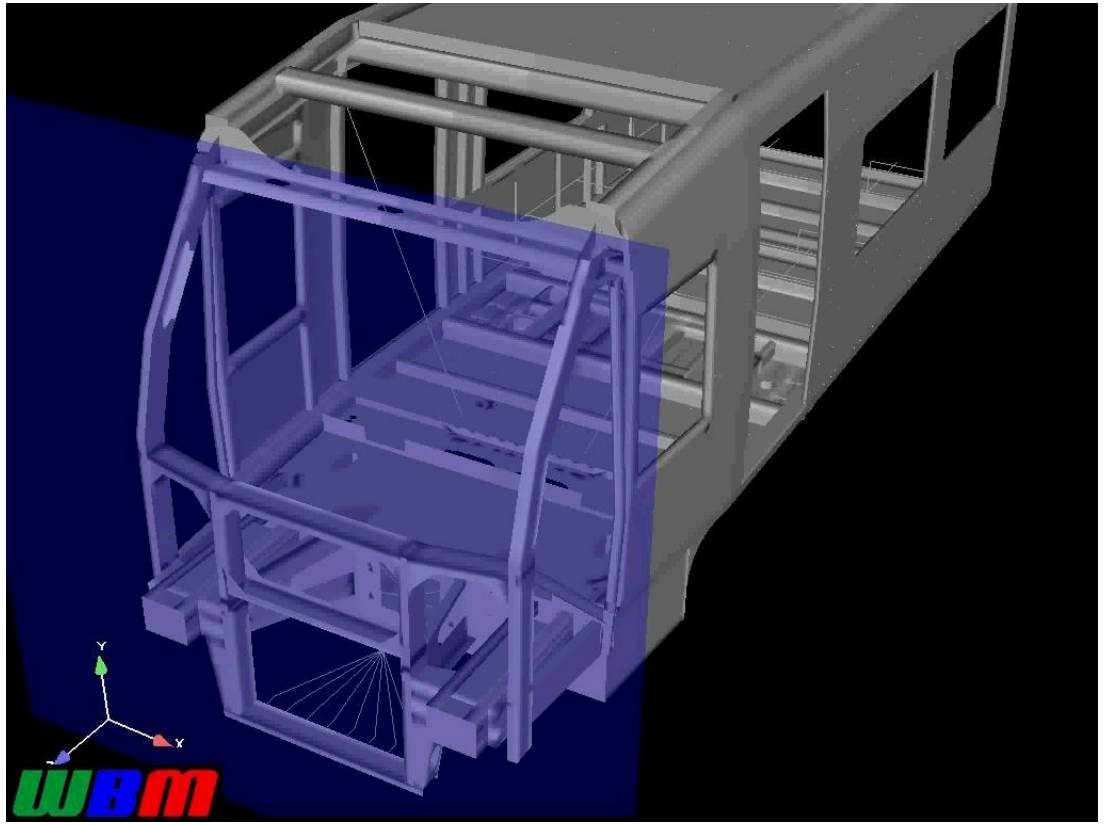

Post weld fatigue improvement

Post weld fatigue improvement methods
Fig1 from Ref 36

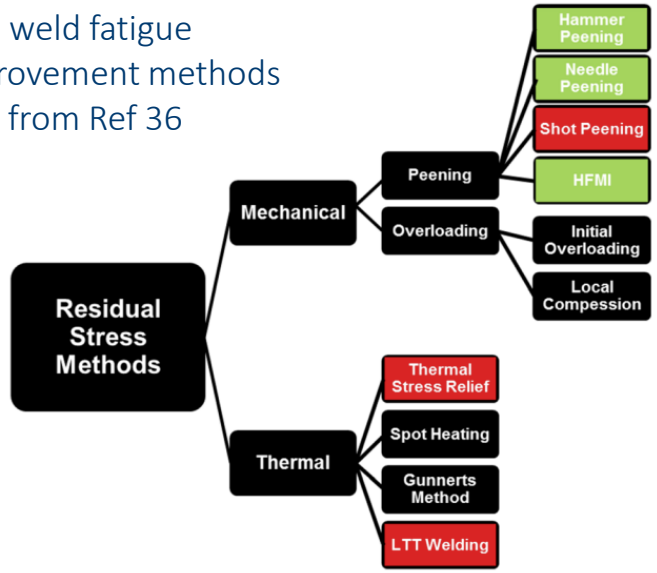

Fig. 1 Overview of different weld improvement techniques

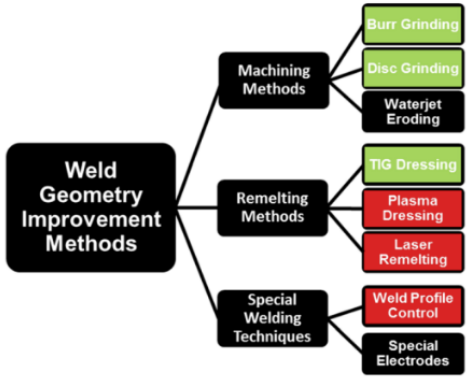

Don't use – will leave grind marks or even grooves parallel to the weld line which must not occur.

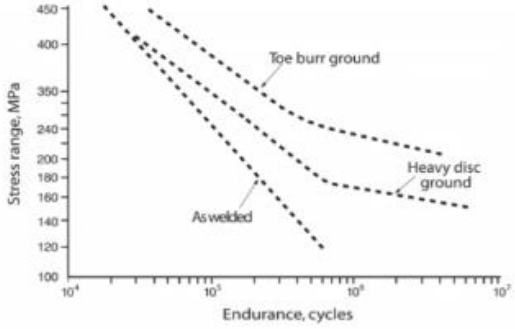

Figure 4 - Effects of Grinding

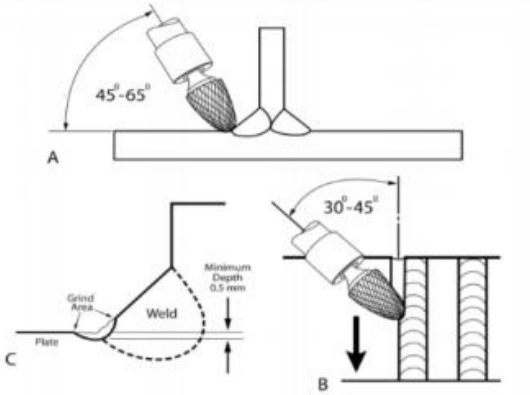

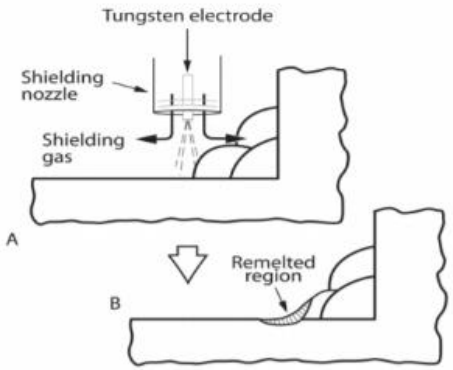

Figure 6 - TIG Re-melting

Case study 6 - Chill roll plastics onto cardboard laminating machine late 80s

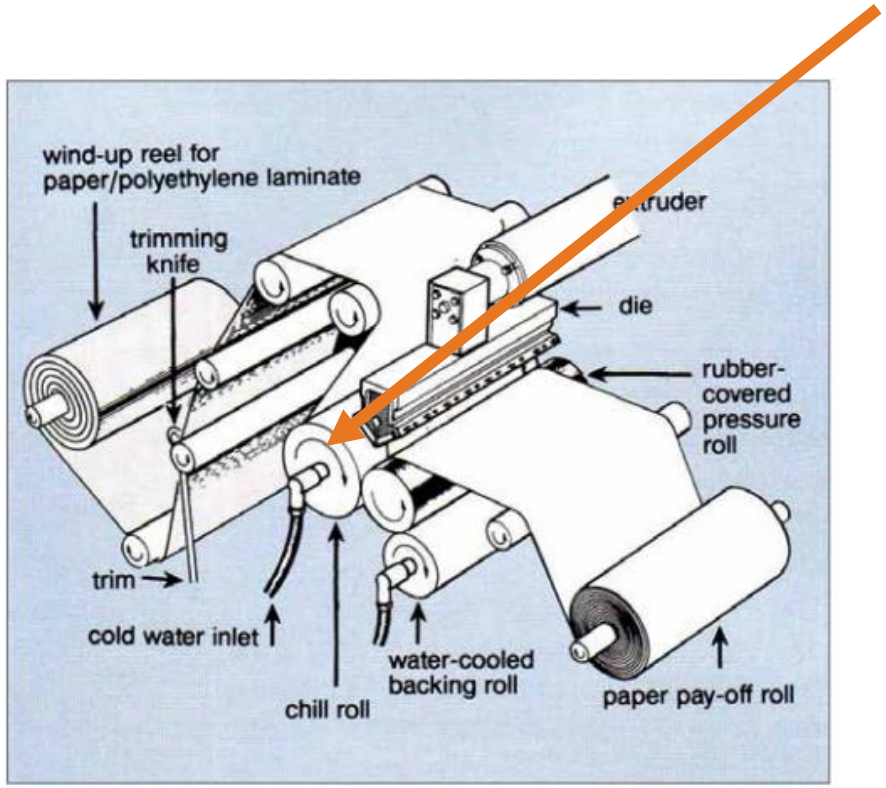

Figure 2: Typical Extrusion Coating Line for a Paper/Polyethylene Laminate

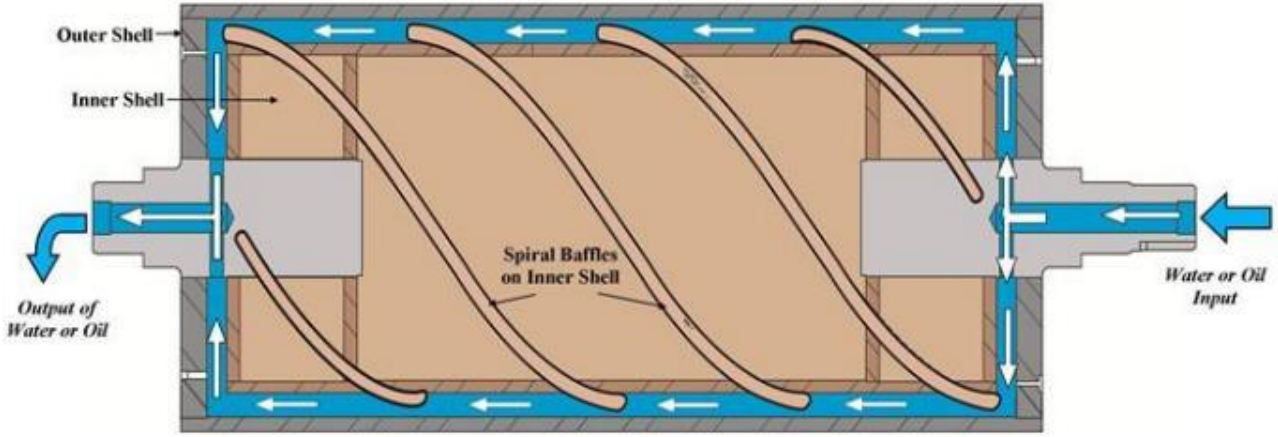

Machine purpose; in conjunction with the pressure roll, to laminate plastic onto cardboard for drink containers.

Case study 6 - Chill roll plastics onto cardboard laminating machine late 80s

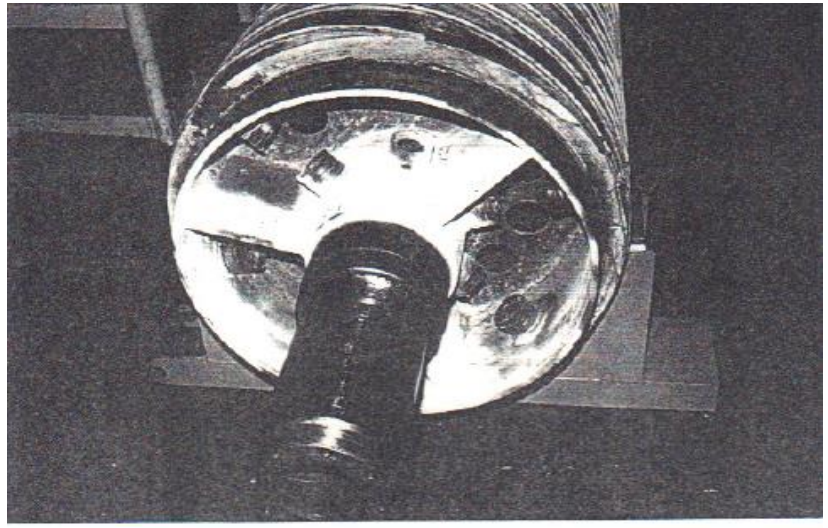

Figure 1. Chill Roll end showing stub shaft, plate stiffeners, outer cylinder, and cooling water tubes. Also shown is the residue white contrast paint from the magnetic particle crack detection testing completed.

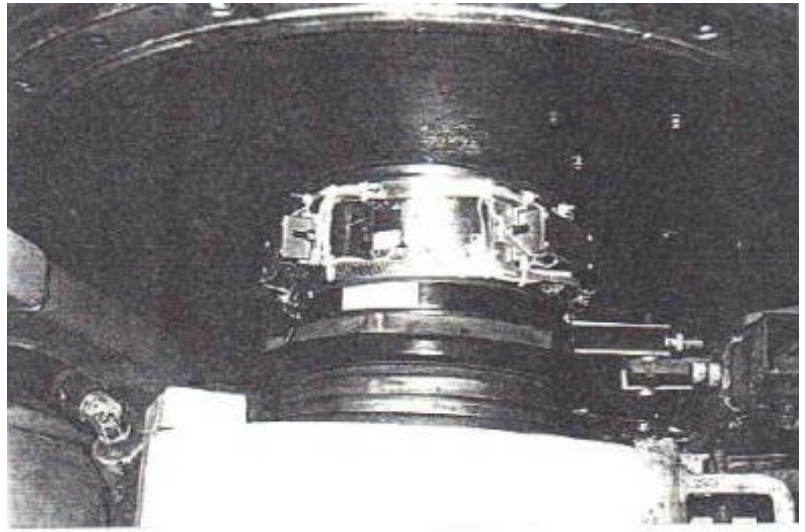

Figure 2. Chill Roll end showing two radio telemetry units fitted, showing transmitter and battery packs, aerials, and receiver probes. The bending and torsional strain gauges are also apparent on the stub shaft.

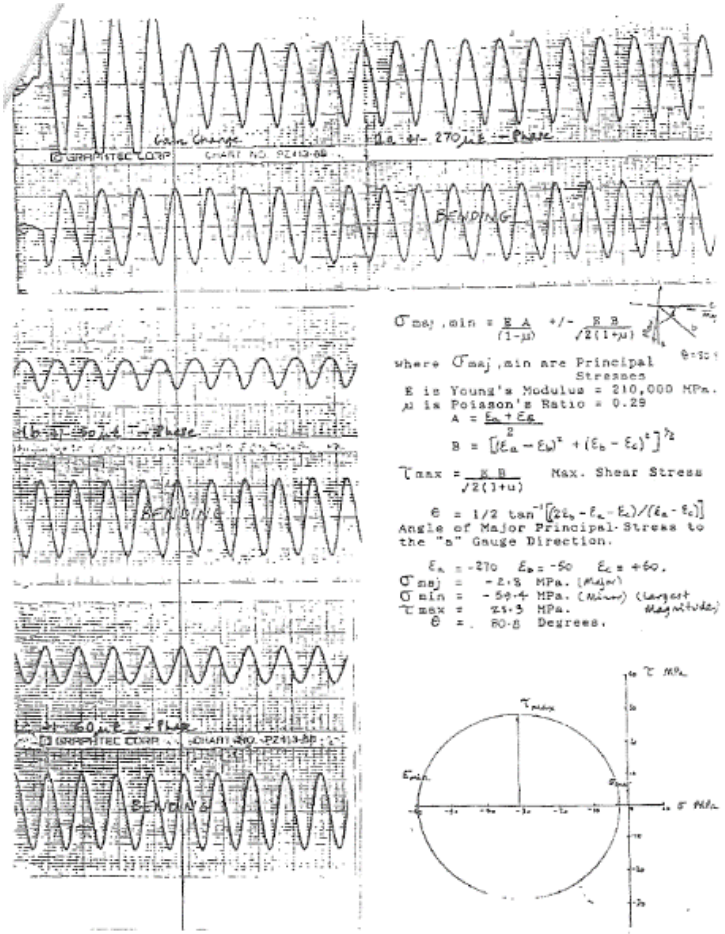

Figure 4. Principal Stresses at Gauge 1 on plate stiffener.

Very poor structural design of stub shaft to inner cylinder connection, using only 3 axially oriented plate stiffeners and fillet welding. Low aspect ratio of shaft. Rotating bending fatigue cracking started at the stiffener inner edge welds to the shaft within months of commissioning.

Case study 6 - Chill roll plastics onto cardboard laminating machine late 80s

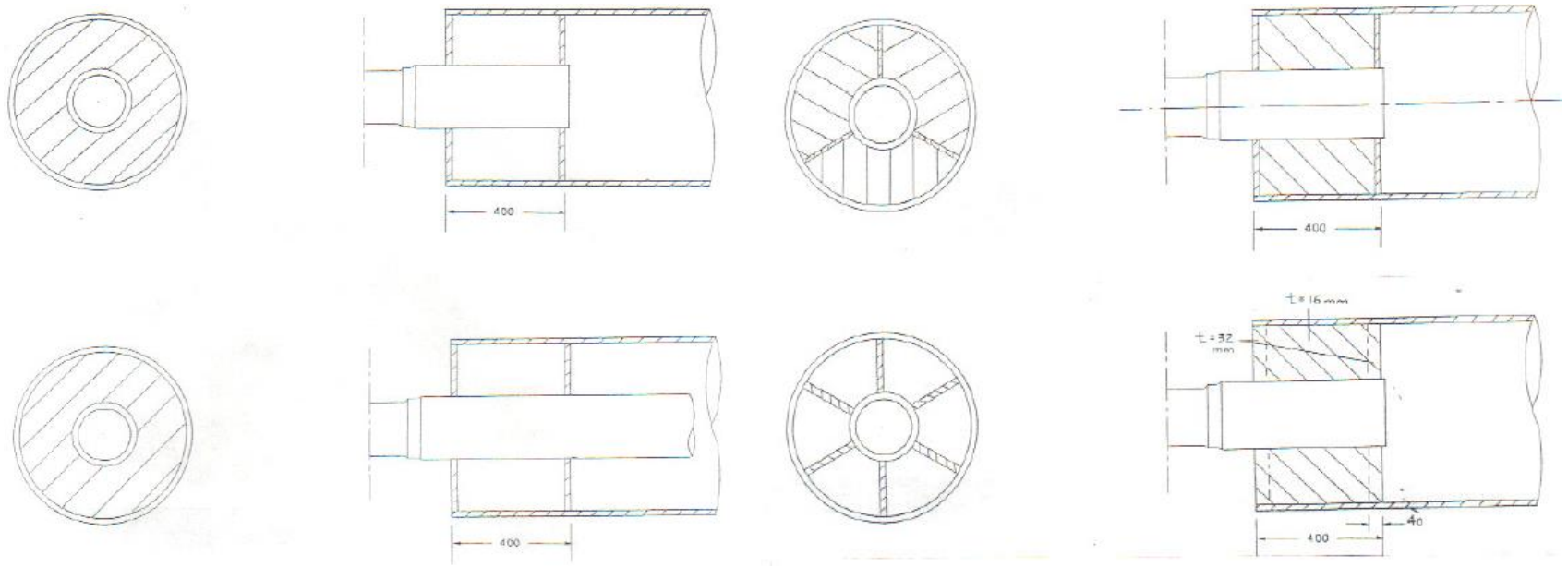

Full weld profiling on pedestrian bridge

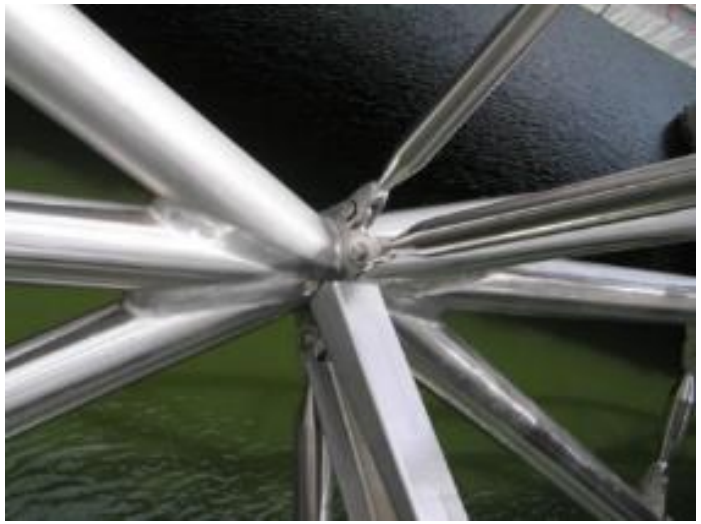

Numerous alternative designs were assessed. Above left are discs used instead of the axially oriented plate stiffeners, with stub or full length shafting. Above right top is a combination of discs and axial stiffeners, and 6 axial stiffeners. Full penetration t butt welds were specified, with oversize fillet welds on top to make a compound weld able to be fully profile ground to increase the fatigue resistance. Post weld heat treatment in furnace. The 6 axial stiffeners is the more typical design now. Welds must be laid oversize so that the post weld grinding does not leave too small a weld throat length.

Case Studies 7, 8 – Ship Structures

1991 - MV Wallarah – Catherine Hill Bay Coal loader to BHP Port Hunter. ABS class.

Cracking in ballast tank frames – why?

Technical Data	
Vessel type:	Self Discharging Bulk Carrier
Gross tonnage:	5,717 tons

Case Studies 7, 8 – Ship Structures

1991 - MV Wallarah – Catherine Hill Bay Coal loader to BHP Port Hunter

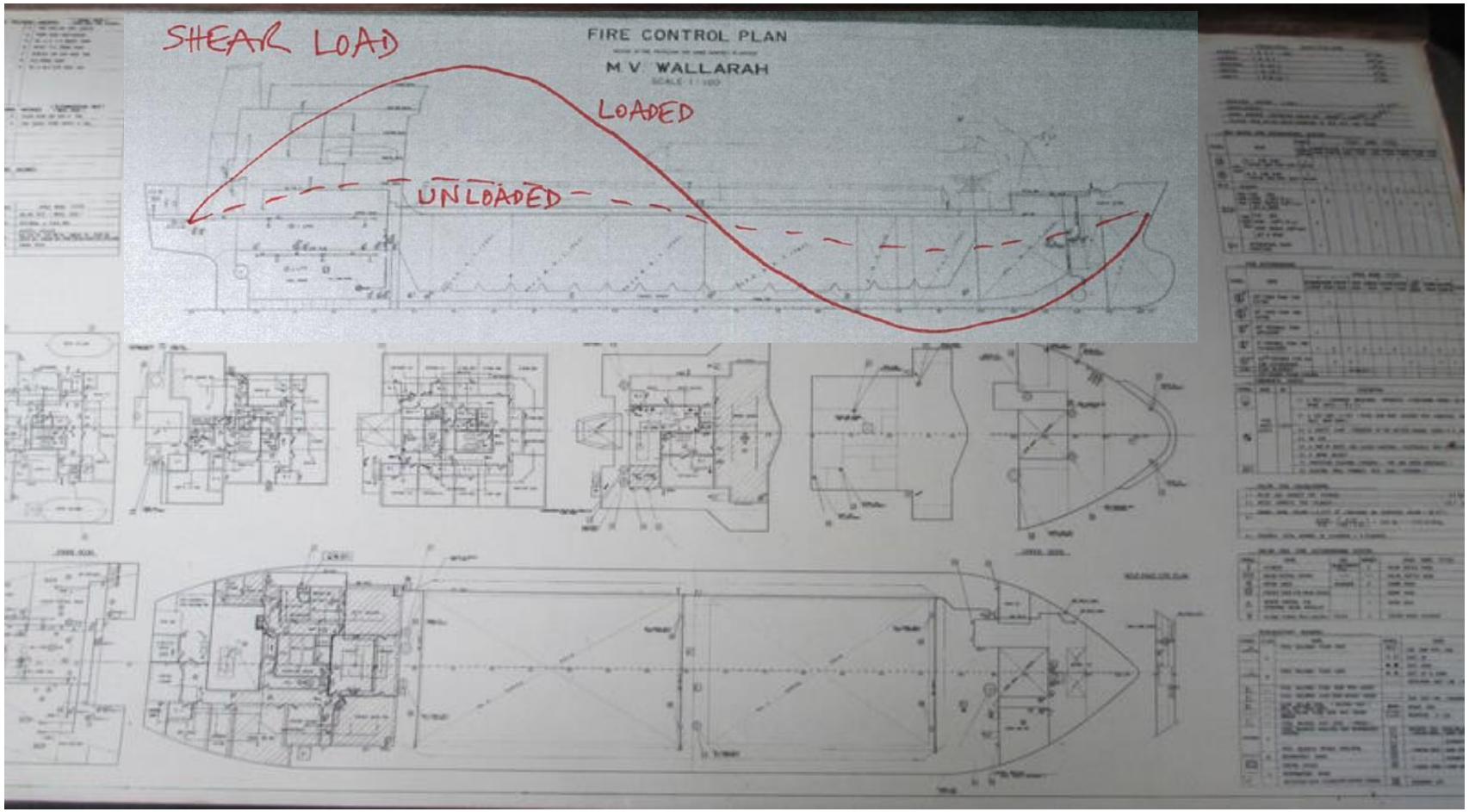

Case Studies 7, 8 – Ship Structures

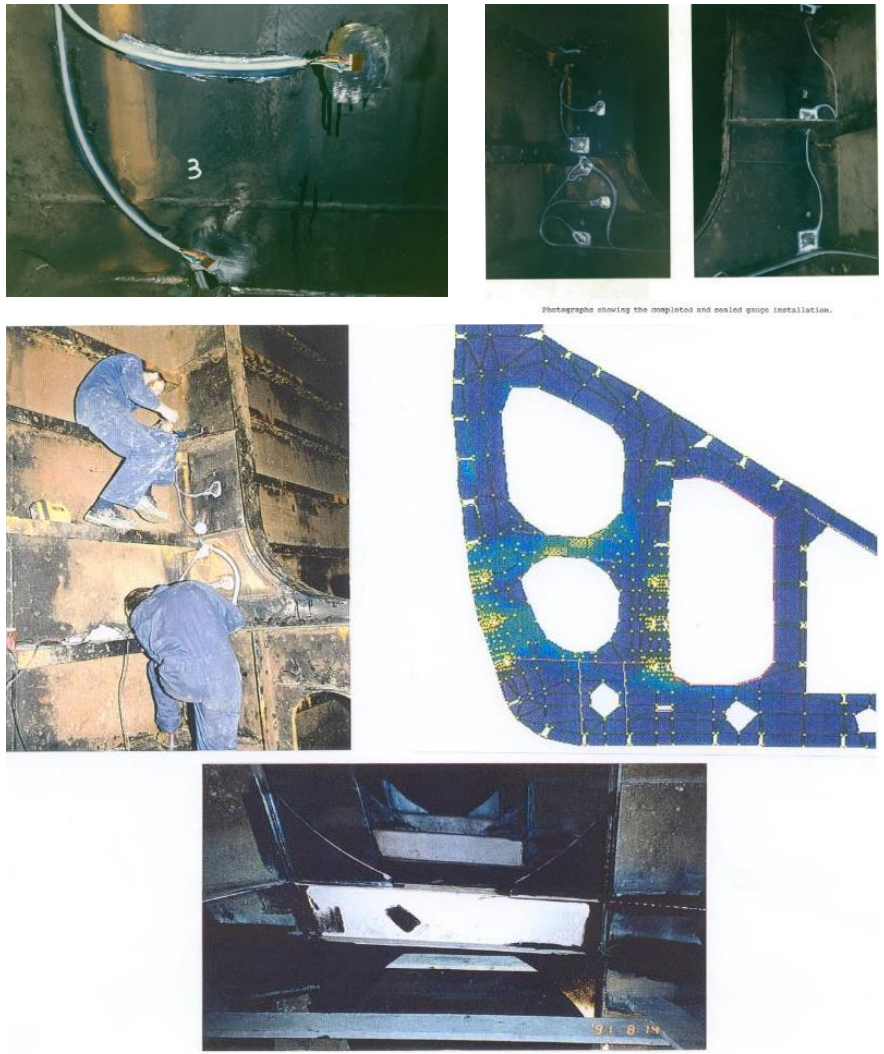

1991 Ballast tank web frame – cracking at longitudinal stringers - added cross tie to avoid lateral buckling type instability.

Rare case of low cycle / high stress fatigue due to once per day load / unload.

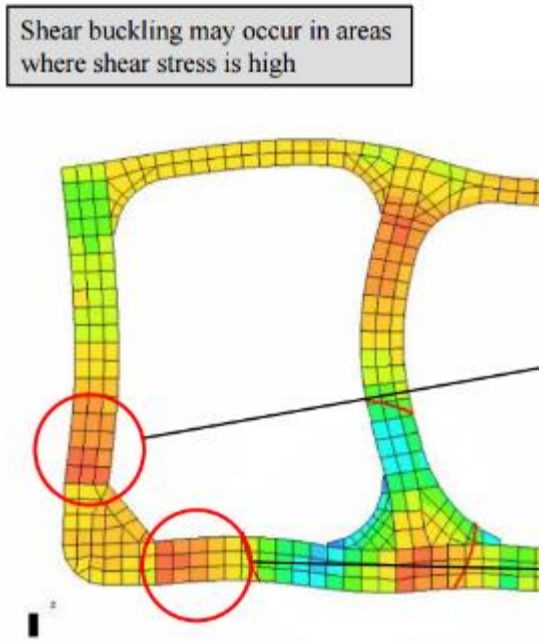

Case Studies 7, 8 – Ship Structures

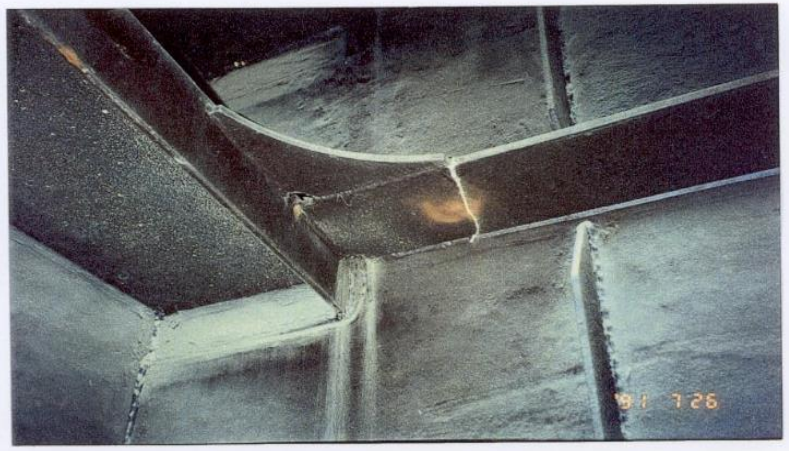

100,000t tanker - ballast tank frame panel fatigue cracking
Rectified by stiffening of the panel to avoid resonance
from structureborne vibrations, and better gusset detailing

1992 5 cylinder direct drive – very bad torsionals at mcr – prop. alternating thrust vibrations exciting ballast tank frame resonances. Would have started cracking on delivery voyage.

Case Studies 7, 8 – Ship Structures

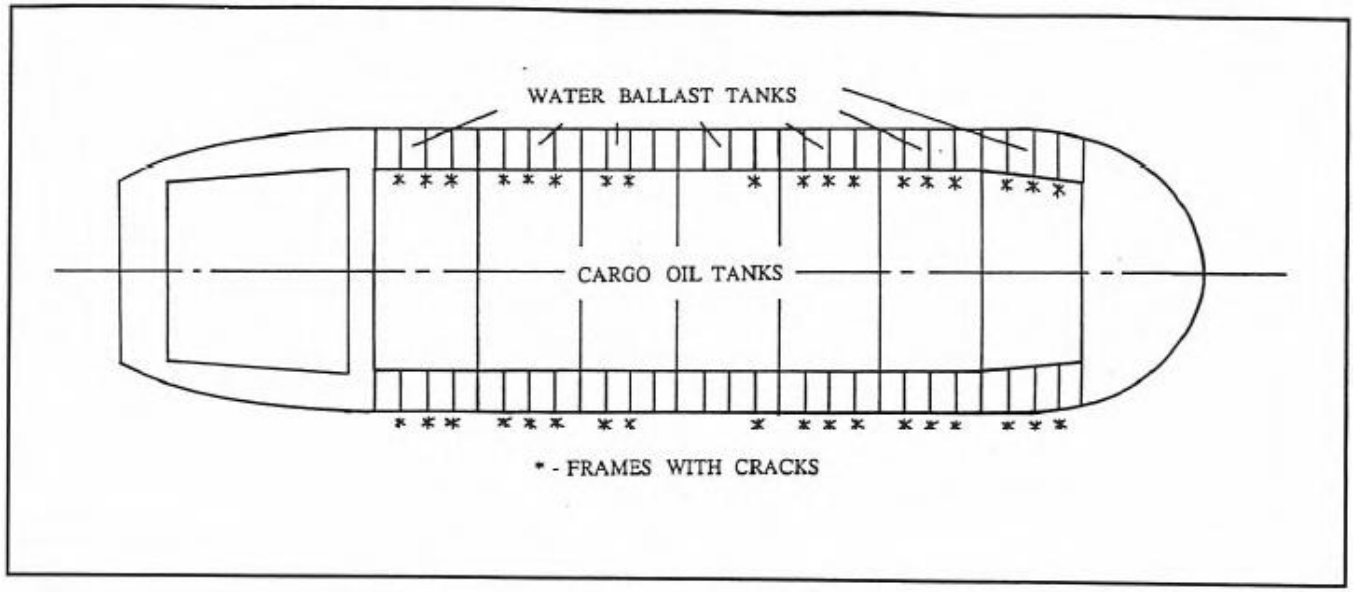

Figure 1 Schematic of vessel cargo oil and water ballast tank configuration

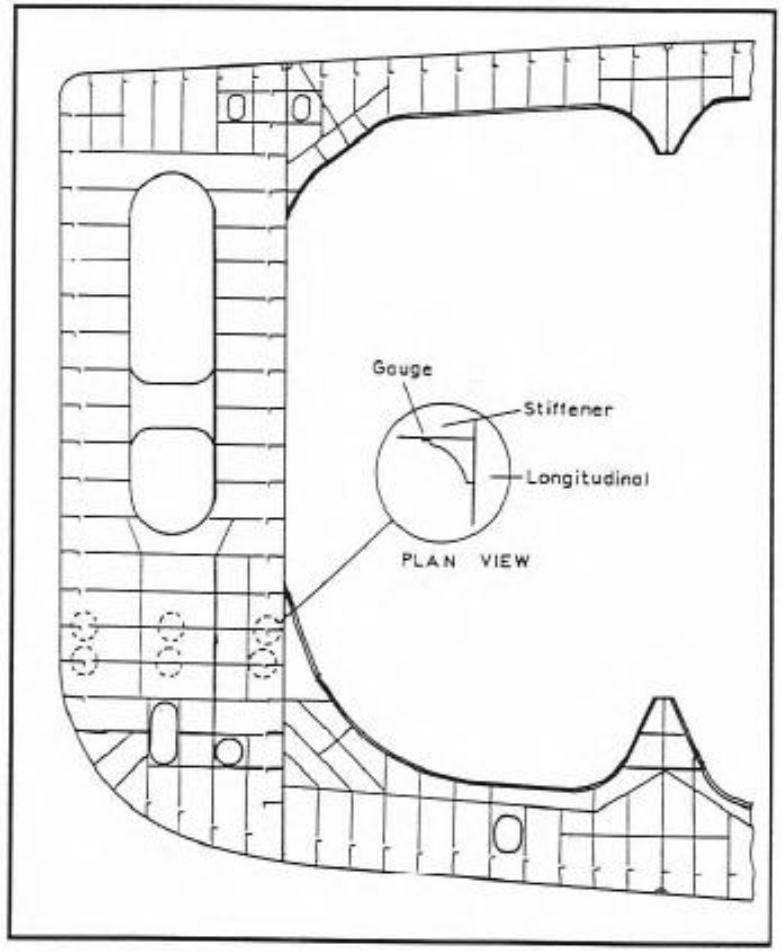

Figure 2 Schematic of the vessel frame in the ballast tank area.

Case Studies 7, 8 – Ship Structures

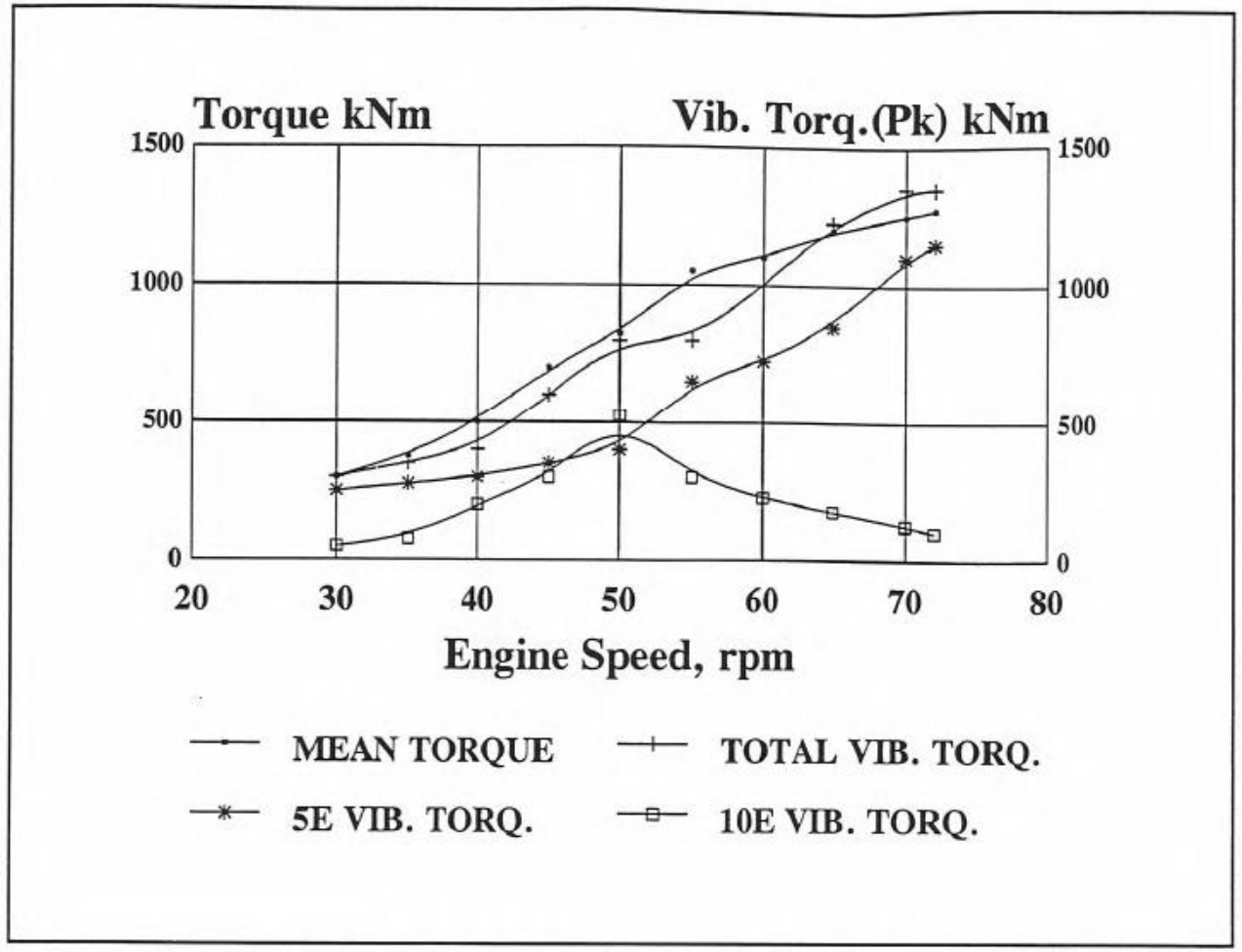

Figure 3 Graph of mean and vibratory torque vs engine speed

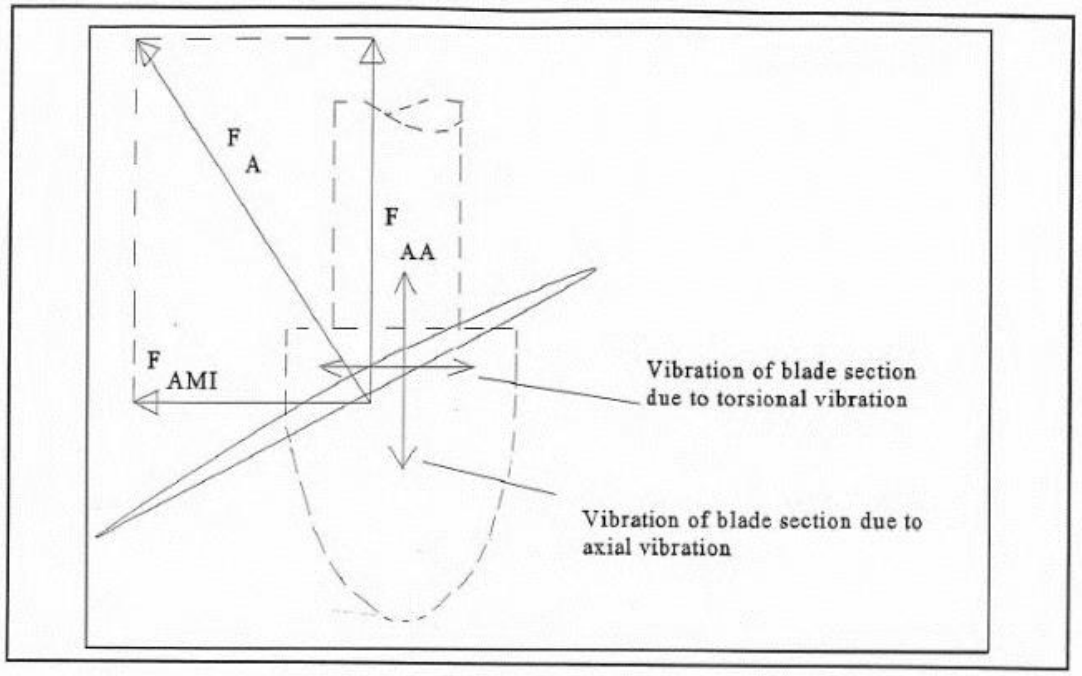

Figure 4 Schematic showing torsional and axial propeller effects

Case Studies 7, 8 – Ship Structures

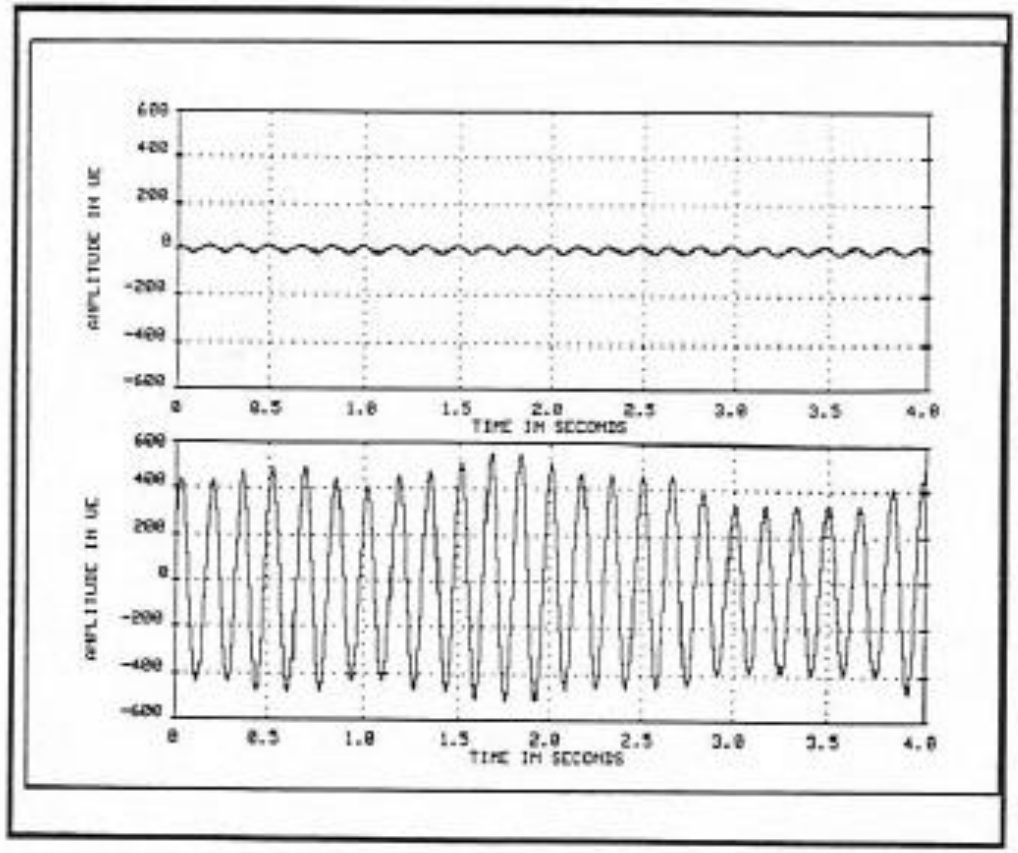

Figure 5 Measured strains at 20% (top plot) and 100% tank fill levels

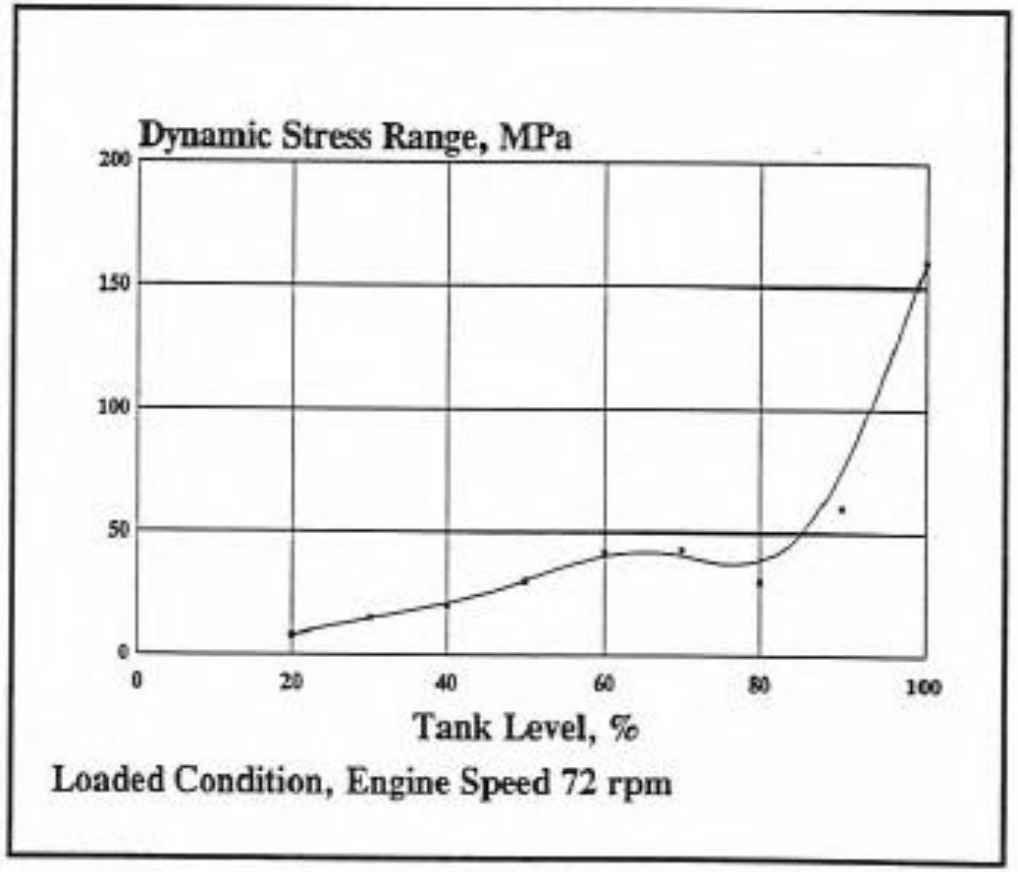

Figure 6 Graph of dynamic stress vs tank level

Case Studies 7, 8 – Ship Structures

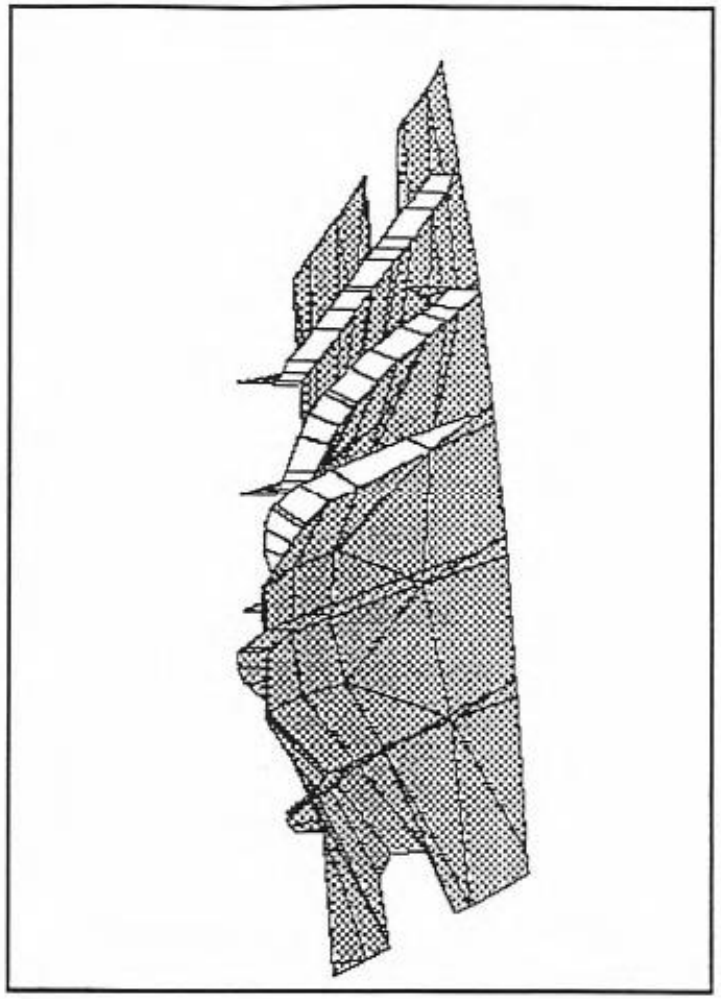

Figure 8 FE mesh of original panel showing mode at 5.8 Hz

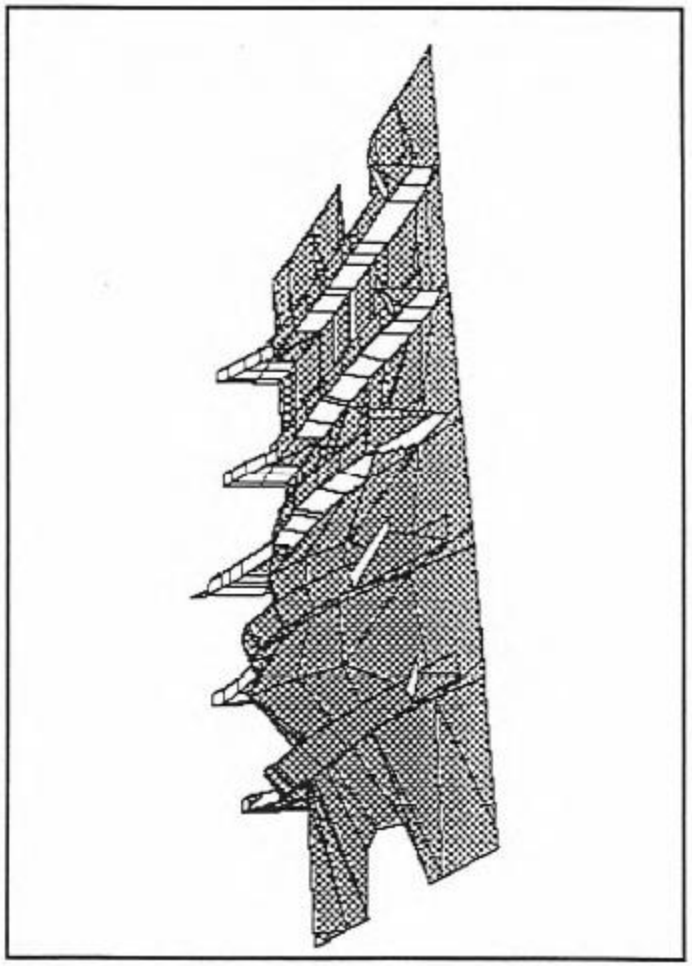

Figure 9 FE mesh of rectified panel showing the mode at 9.5 Hz

Case Study 9 – Design Rectifications Dump Truck Tray Bodies early 2000s

Too many flanges and gussets ending at unsupported plate areas – punch through.

Insufficient canopy ribs, canopy support side plates too small and thin, flanges have no tripping gussets

Tray bodies were not the truck OEM design – sub-contracted out.

Lateral ribs do not extend to top rail, insufficient ribs, ribs too thin, top rail too weak

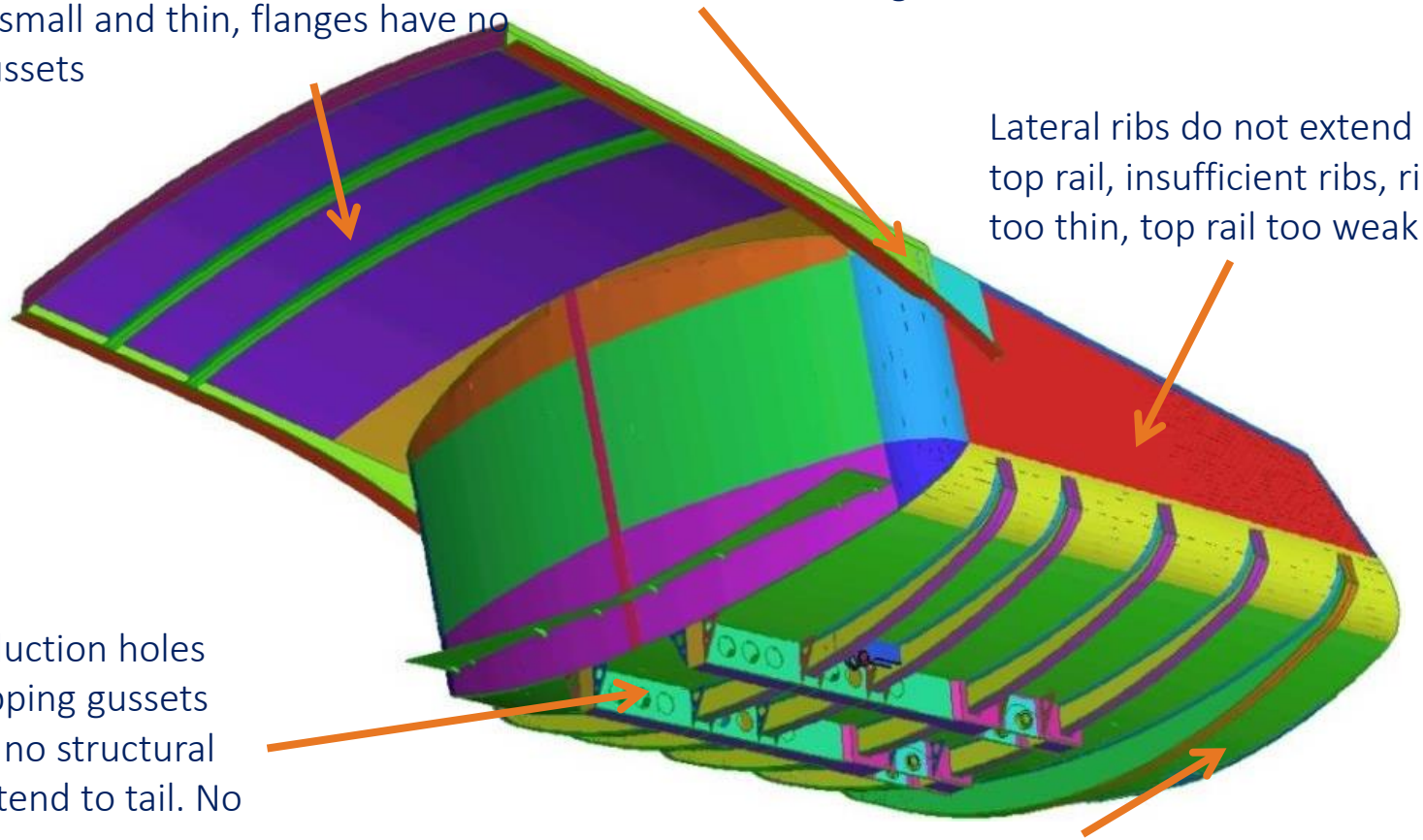

Longitudinal sill beam weight reduction holes excessively weakening these. Tripping gussets poorly designed. Sill beams have no structural continuity to rib webs, should extend to tail. No flange gussets rib flanges to sill beams.

Ducktail too long, completely unsupported

Case Study 9 – Design Rectification Dump Truck Tray Bodies

Original Body Geometry

Case Study 9 – Design Rectification Dump Truck Tray Bodies

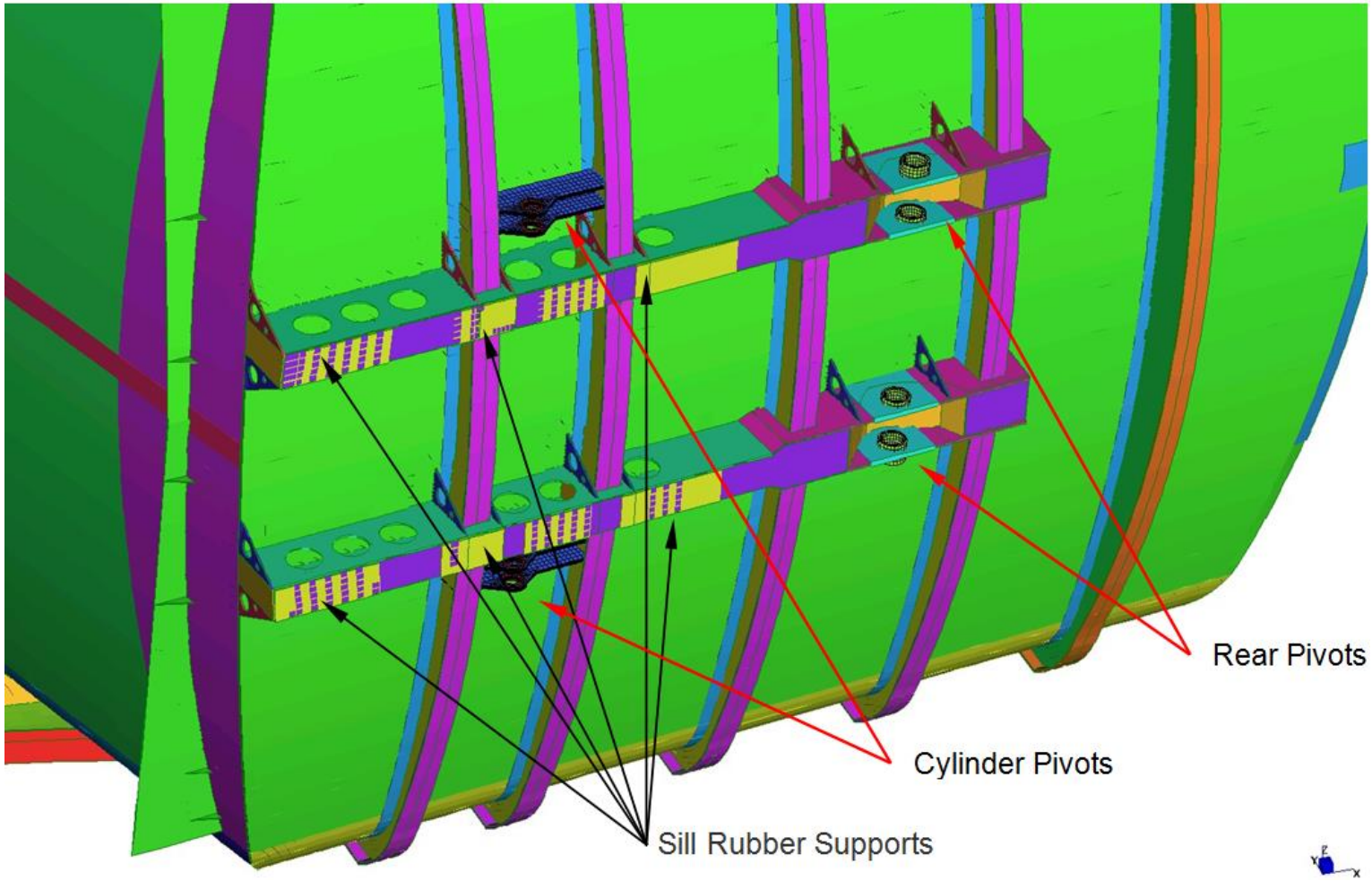

Original Body Geometry

Case Study 9 – Design Rectification Dump Truck Tray Bodies

Load Case	Description	Boundary Condition
1	Equivalent hydrostatic pressure due to 320t of material centrally located.	A
2	Rolling acceleration of 1 rad/s^2 around the central longitudinal axis of the chassis with 320t load.	A
3	Lateral 0.9g acceleration. Based on MTI report with 320t load.	A
4	Pitching acceleration of 1 rad/s^2 around the tray body rear pivots, with 320t load.	A
5	Vertical acceleration of 0.65g (above gravity) based on the MTI report, with 320t load.	A
6	Vertical impact on bed centred above lift pivot equivalent to 40t at 1g acceleration.	A
7	Lateral impact at the centre of a side wall equivalent to 40t at 1g acceleration.	A
8	Lateral impact on top edge of side wall equivalent to 5t at 1g acceleration.	A
9	Vertical impact on side edge of wall equivalent to 5t at 1g acceleration.	A
10	Twisting due to lack of support from one rear pivot under 320t load. Similar to DT Phase VI report.	B
11	Initial tipping when all reaction forces are via the front and rear pivots.	C
12	Tail dragging with the body fully tipped over with a 20t longitudinal distributed tail load. Similar to DT Phase VI report.	C

Table 2. Load Cases.

Case Study 9 – Design Rectification
Dump Truck Tray Bodies

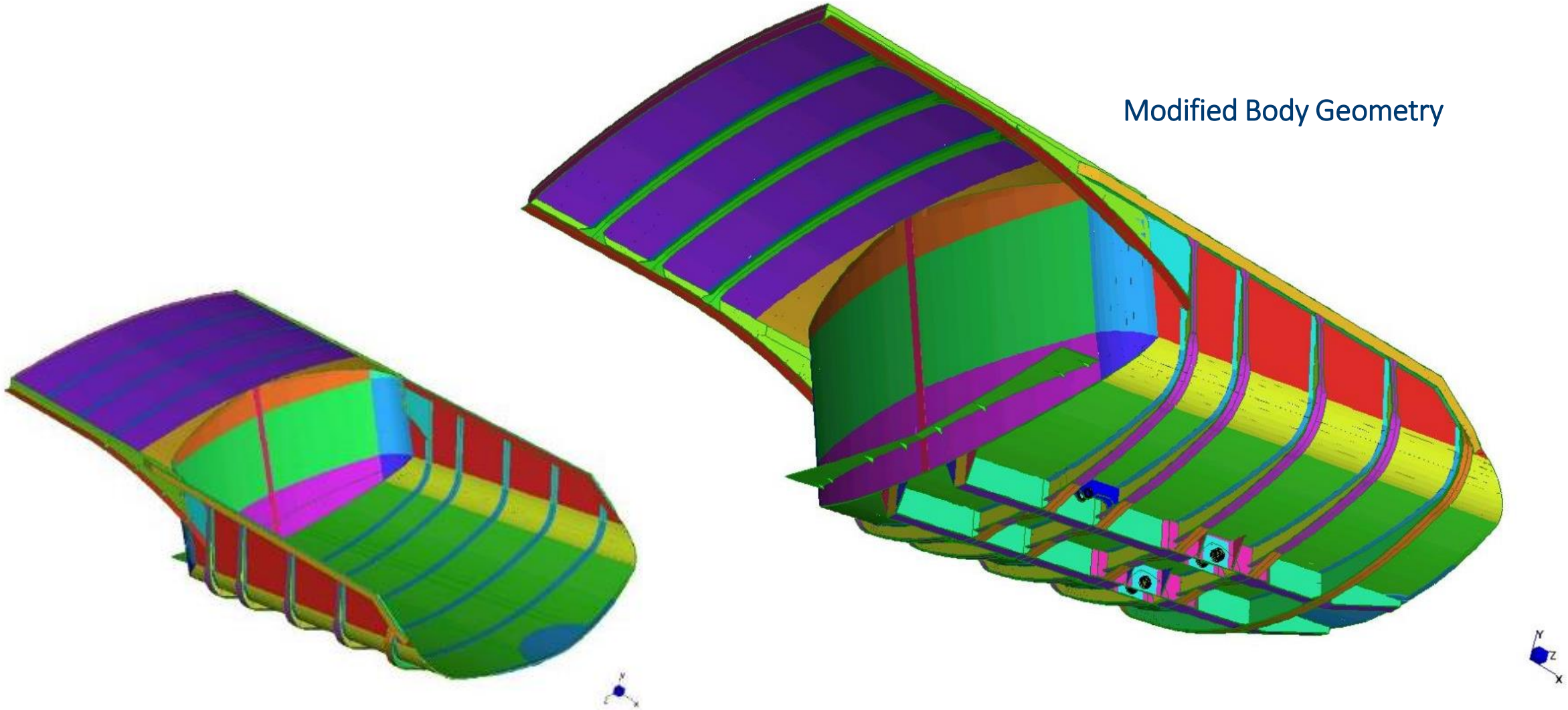

Case Study 9 – Design Rectification Dump Truck Tray Bodies

Area	Description	Proposed Solutions
1	Canopy to body joint area, including down the side into the elephant ear brace.	Increase elephant ear web and increase thickness of lower flange. Add 4 tripping gussets between elephant ear web and lower flange. Add one extra canopy cross beam. Terminate and flair canopy cross beam flanges into elephant ear lower flange.
2	Top rail T beam and side sheet.	Add channel section to top edge of side sheet. Extend whale ribs to meet new side channel.
3A	Body pad sill beam at front location.	Replace sill webs with new sheet without weight reduction holes. Remove gussets near hoist pivot and replace remaining gussets with new gussets with web 'toe'.
3B	Sill beam about the hoist lift cylinder pivots. (Between beams 4 and 5)	Sill webs to butt against and weld to 'whale rib' webs and flanges. Add flanged gussets between whale rib webs and sill beams.
3C	Sill beam between beams (1 and 2).	Extend sill beam structure to the tail of tray.
4	All 5 cross beams ("whale ribs").	Increase gauge thickness of flange and web.
5	Pivot structure including pin boss and box bracing gussets.	Increase thickness of gussets, remove holes and add web toe.
6	Body floor centre weld joint in rear panel – longitudinal joint. Also underside rear body tip reinforcement plate.	Extend sill beam structure to the tail of tray.
7	Body floor cross weld joint, adjacent to rear panel, under rear cross beam.	Extend sill beam structure to the tail of tray. Stiffen side panels as described for area 2 above.
8	Inside the body, floor, sides, front.	Add wear plate.

Table 1. Areas of Design Changes and Proposed Solutions.

Modified Body Geometry

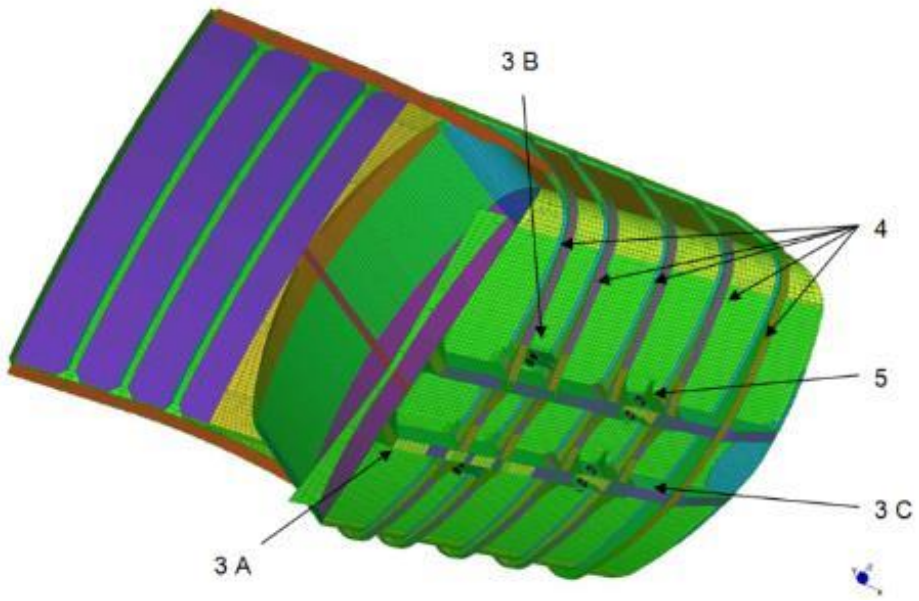

Case Study 9 – Design Rectification
Dump Truck Tray Bodies

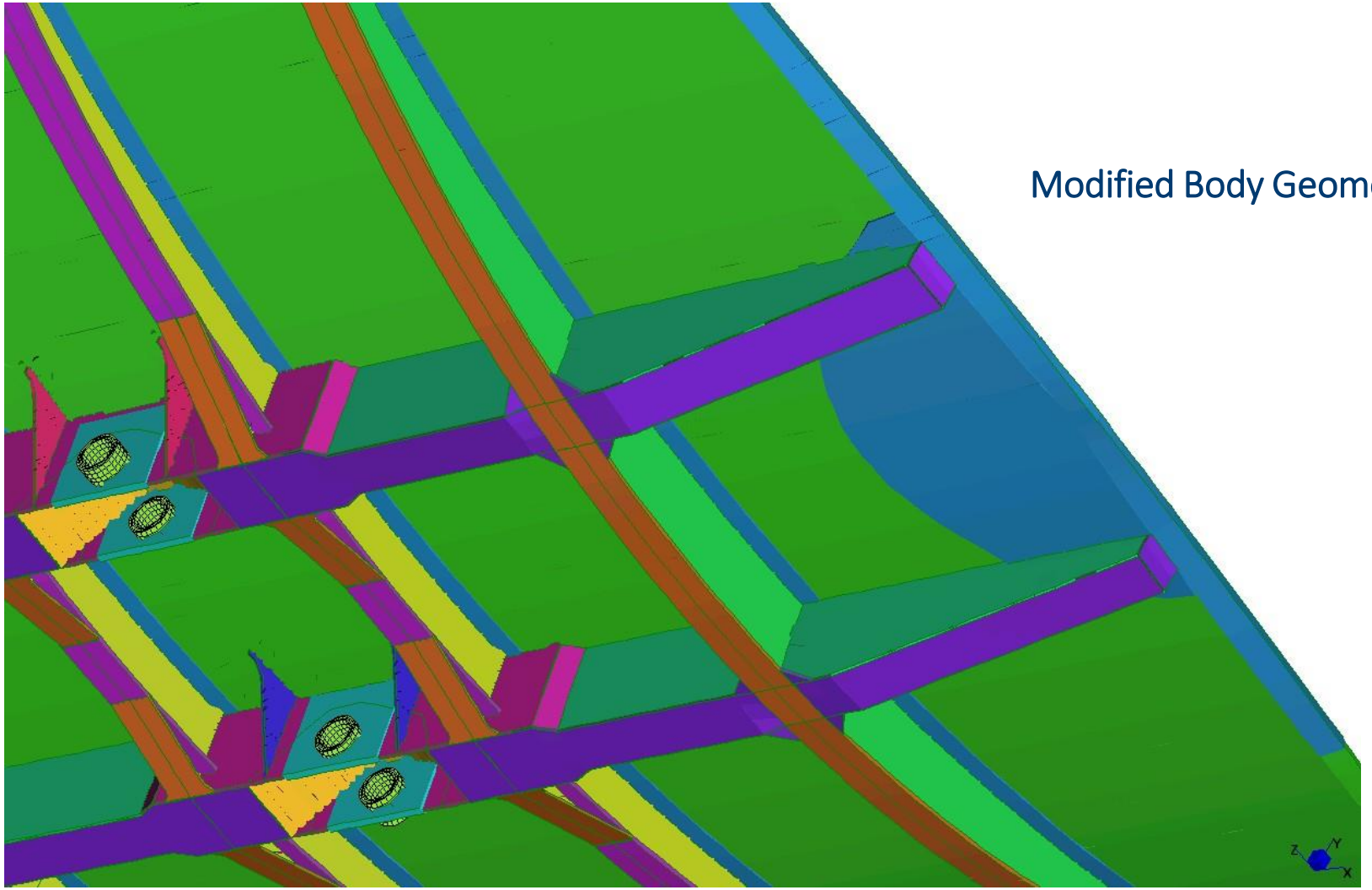

Modified Body Geometry

Case Study 9 – Design Rectification Dump Truck Tray Bodies

Engineering Institute of Technology.

Fabrication process:

- Drawings including fabrication notes
- Weld procedures to AS1554.4:2004 Category FP
- QA plan – WSM, ITP, welder and weld procedures qualifying etc.
- All joints / gussets faired and blended.
- Specific weld ends hand ground and fully transitioned / blended (oversize weld legs).
- Implement to a “prototype” body, trial for a relevant time period – totally successful, extended to whole fleet.

Modified Body Geometry

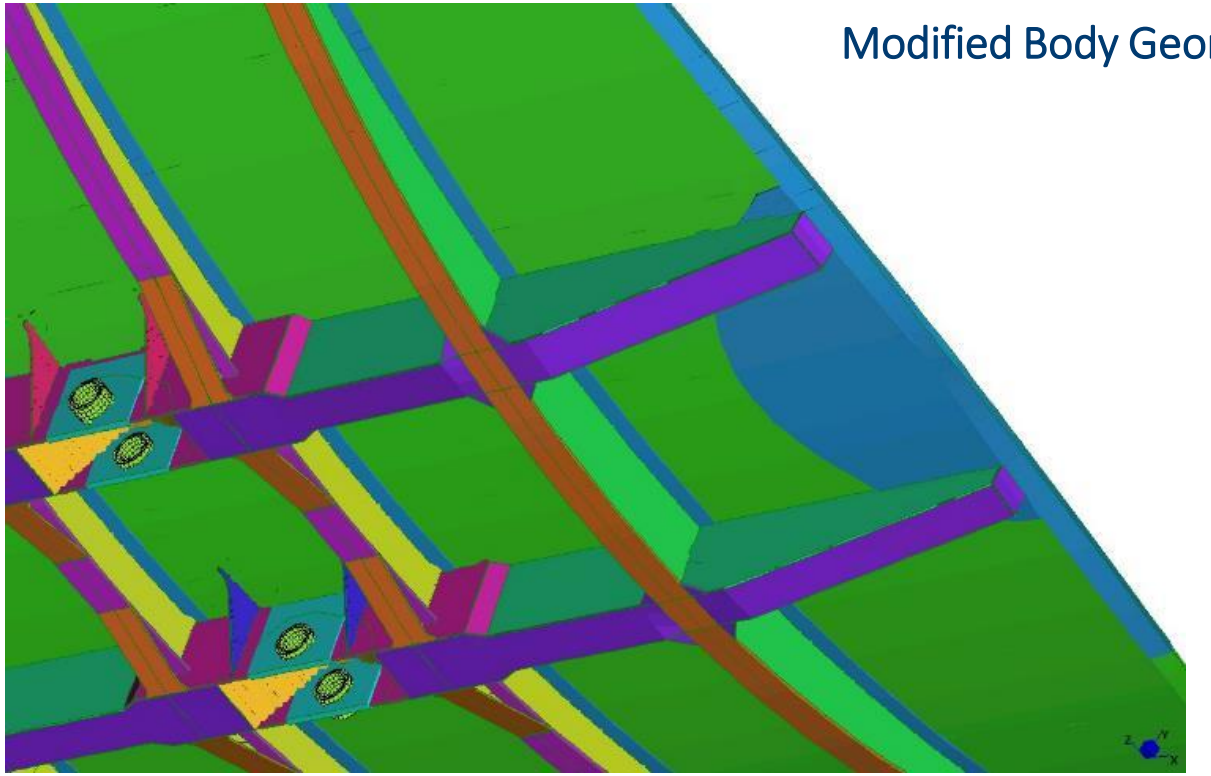

Low-mid Cycle Fatigue – Strain Life (Awareness)

Relation of Fatigue Life to Strain

- Coffin-Manson Law [1954, 1953]
- ***Fatigue ductility coefficient, ε'_F*** is approximately equal to te true fracture ductility, ε_F
- ***Fatigue ductility exponent, c*** is the slope of plastic-strain line, and is the power to which the life 2*N* must be raised to be proportional to the true plastic-strain amplitude. Ranges from -0.5 to -0.7

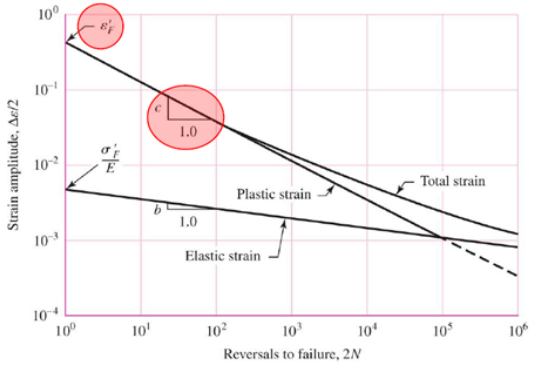

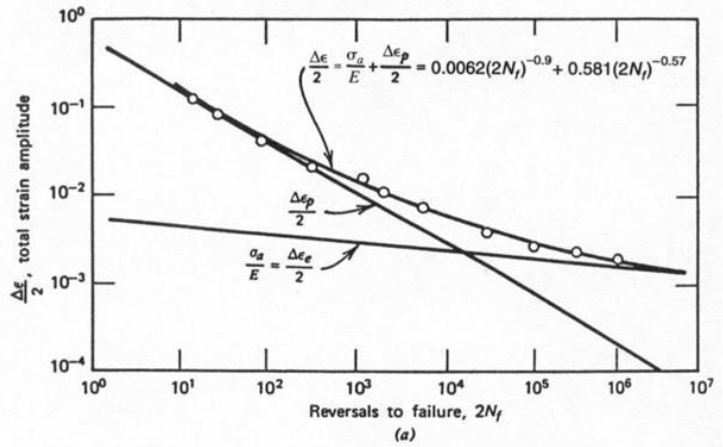

Typical Complete Strain-life Curve With Data Points For Annealed 4340 Steel

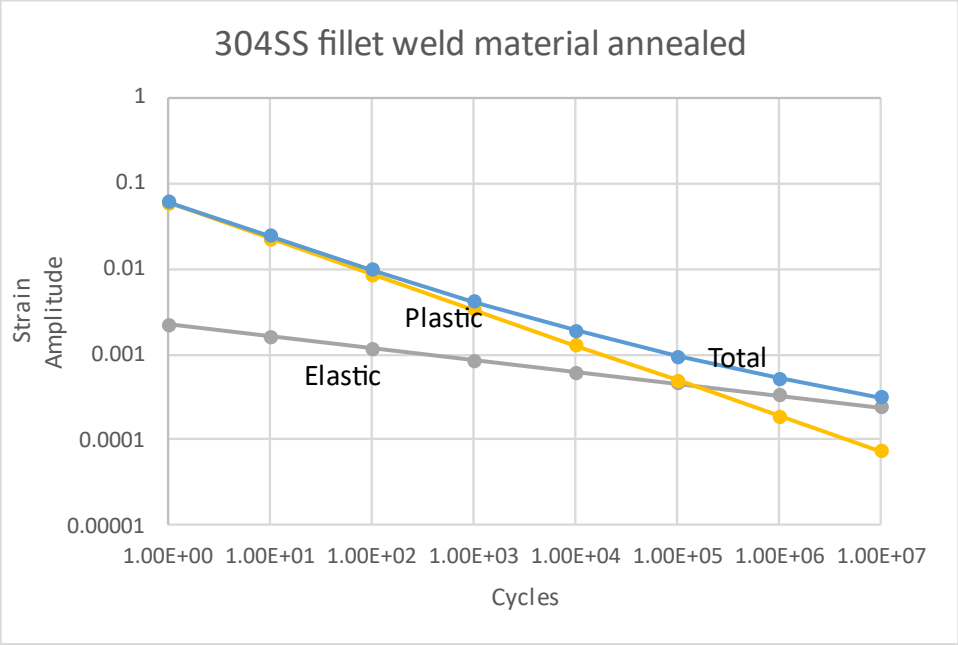

Case Study 10 – 2006 Army Watercraft Lifting Lugs

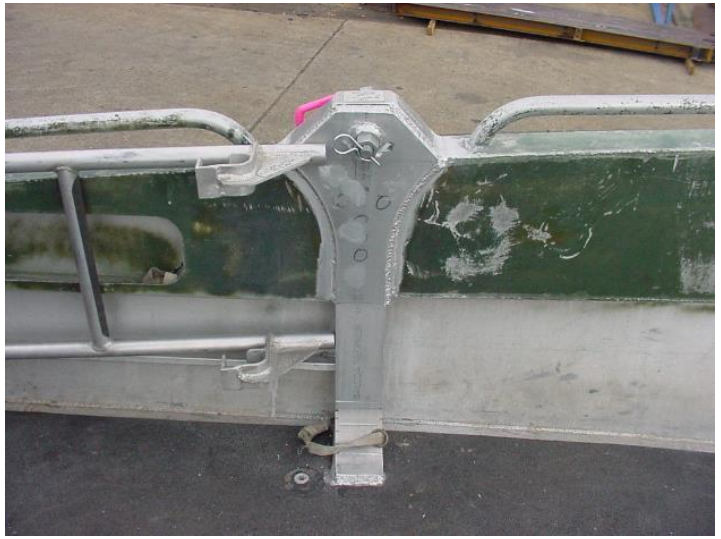

Lifting lugs – original flat plate and gussets very poor design. Fatigue cracking inherently occurred.

Rectified design used boxed in haunch style with Rud links, also with good structural continuity to the rest of the craft framing.

Multiaxial Fatigue (MAF) (Awareness)

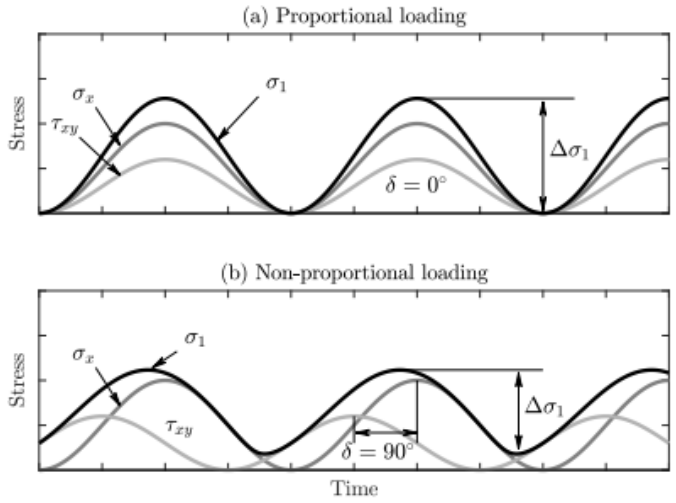

Pedersen Ref 11.

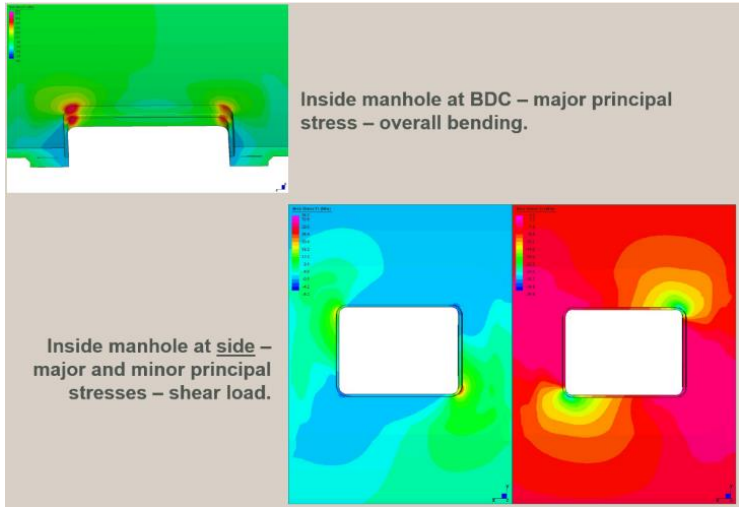

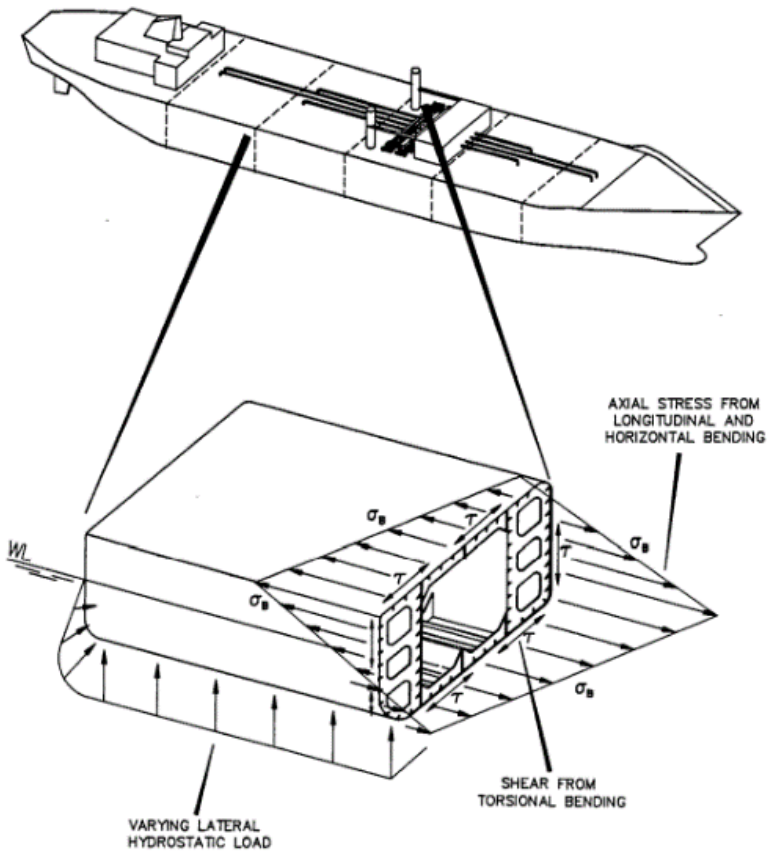

Figure 2-1

GLOBAL STRESSES DUE TO COMBINED VERTICAL AND LATERAL BENDING AND TORSION

MAF awareness commended 1930s. Since 1990 research has been intense with hundreds of papers written. Combined normal and shear stresses in phase (proportional or simple multiaxial) or out of phase (non-proportional or complex multiaxial) loading.

Multiaxial Fatigue (MAF) (Awareness)

Typically occurs in; grinding mills, rotary kilns, large waste compactor horizontal drums, vehicle components, wind turbine blades, ships, many others. Criteria based on correlating fatigue data sets to a suitable assessment algorithm

Table 4.1 Assessment procedures for combined normal and shear stress using S-N curves

Type of load	Normal and shear stress	Assessment procedure	Specified damage sum D or comparison value CV
Constant amplitude	Proportional	Assessment on the basis of the maximum principal stress or $\left(\frac{\Delta\sigma_{S,d}}{\Delta\sigma_{R,d}}\right)^2 + \left(\frac{\Delta\tau_{S,d}}{\Delta\tau_{R,d}}\right)^2 \leq CV$	CV = 1.0
	Un-correlated	$\left(\frac{\Delta\sigma_{S,d}}{\Delta\sigma_{R,d}}\right)^2 + \left(\frac{\Delta\tau_{S,d}}{\Delta\tau_{R,d}}\right)^2 \leq CV$	CV = 0.5[a]
Variable amplitude	Proportional	Assessment on the basis of maximum principal stress and Miner's rule, or $\left(\frac{\Delta\sigma_{eq,S,d}}{\Delta\sigma_{R,d}}\right)^2 + \left(\frac{\Delta\tau_{eq,S,d}}{\Delta\tau_{R,d}}\right)^2 \leq CV$	D = 0.5 CV = 1.0
	Un-correlated	$\left(\frac{\Delta\sigma_{eq,S,d}}{\Delta\sigma_{R,d}}\right)^2 + \left(\frac{\Delta\tau_{eq,S,d}}{\Delta\tau_{R,d}}\right)^2 \leq CV$	D = 0.5 CV = 0.5[a]

Ref 6. Damage sum recommended to be 0.5, possibly less in some instances.

Recommendations
for Fatigue Design of Welded
Joints and Components

Second Edition

IIW document IIW-2259-15
ex XIII-2460-13/XV-1440-13

Figure 3. Setup of the experiments for load cases of torsion and bending on the torque controlled Scheme 044 (right) and bending load case FF040 (left), both using S2 specimens.

Ref 28.

Ref 12. 17 criteria compared

Benchmarking Newer Multiaxial Fatigue Strength Criteria on Data Sets of Various Sizes

Jan Papuga [1,*], Martin Nesládek [1], Alexander Hasse [2], Eva Cízová [1] and Lukáš Suchý [2]

Suggest task a suitably qualified and highly experienced consultant who has one of FE-Safe, CAEFatigue, DesignLife etc.

Design Validation Aspects

Suitable design validation tasks should be completed on a prototype of the verified final design arrangement, or on the first of type manufactured. Obviously the latter is not as preferred as the former but size and logistic issues obviously impact the processes. Design validation is not factory acceptance testing or trials (FAT) or site acceptance testing or trials (SAT) or quality assurance inspection check with an inspection and test plan (ITP).
What Is Factory Acceptance Testing? - Purpose of FAT | IFS (ifsolutions.com)

Rather design validation is a holistic series of performance trials with relevant load cases and multi-channel simultaneous data recordings, which are intended to prove, also in correlation with computational design FEA simulations, that the design and fabrication of the mechanical equipment results in fitness for purpose and operational performance correlating with the specifications, and the equipment meets required criteria including (but not limited to) weight, centre of gravity, stability, deflections / stiffness, strength, buckling, machinery and structural dynamics and fatigue resistance, vibration, noise, durability, reliability, and safety. The complete scope of design validation trials depend on the equipment type. A typical example of a light rail vehicle design validation trial series is;
https://www.transport.nsw.gov.au/system/files?file=media/asa_standards/2017/t-lr-rs-00300-st.pdf

A typical railway ride comfort standard is;
https://standards.iteh.ai/catalog/standards/cen/1fb5a39d-ef33-4d55-b91f-25037435497e/en-12299-2009

The Australian standard AS4324.1-2017 is a good guide to all load cases for mobile materials handling equipment.
https://infostore.saiglobal.com/en-au/standards/as-4324-1-2017-99202_saig_as_as_208581/

Obviously the design validation trials must cover all operational conditions of the equipment, including the travelling and rotational speed range, as well as the throughput range – flow, pressure, tonnes/hr – and load cases – dead, live, inertia, wind, snow or ice, thermal, pressure, travelling skew loads, off-centre, erection, buffer impact, tilting, chute and walkway, others.

Design Validation Aspects

Displacement, load cell and vibration sensors are easily mounted and cover a wide range;https://www.bestech.com.au/products/sensors-instrumentation/displacement-sensors/
https://www.bestech.com.au/products/sensors-instrumentation/load-cells/
https://www.bestech.com.au/products/sensors-instrumentation/accelerometer-vibration-sensors/

Strain gauge sensors and recording systems take more planning and effort to install but are critical for strength and fatigue stress determination;
https://www.bestech.com.au/wp-content/uploads/brochures/Cat_-_STRAIN_GAUGES_-_TML.pdf

Data acquisition systems are readily available including wireless;
https://www.bestech.com.au/products/sensors-instrumentation/data-acquisition-system-data-logger/

Cumulative fatigue analysis from dynamic strain/stress recordings must be completed with dedicated software involving rainflow counting;
https://www.ncode.com/
https://fatigue-life.com/rainflow-counting/

Operating deflection shapes and modal analysis, motion amplification and Campbell diagrams are critically important in numerous rotating machinery equipment types;
https://www.oros.com/applications/structural-dynamics/modal-analysis/
https://web.archive.org/web/20150924004658/http://www.ewp.rpi.edu/hartford/~ernesto/F2013/SRDD/Readings/Nelson2007-RDwithoutEqns.pdf

Ensure equipment and machinery natural frequencies are well recorded and known, so that resonances are not included during operations. Whole of equipment structural resonances, rotating machinery lateral and torsional resonances.
https://rotorlab.tamu.edu/me459/NOTES%209%20Torsional%20Dynamics%20Overview.pdf

Design Validation Aspects

Design Validation via Measurement

- Production schedules are critical
- Require minimum downtime for equipment installation
- Detailed pre-planning essential for installation of;
  - Gauges
  - Cabling
  - Telemetry instrumentation

3 – element rosette gauges on shell to head weld toe, and trunnion neck

Gauges lead to multiplexer

Motor shaft torque

Recording

Design Validation Aspects

Rail Bogie Fatigue Testing – Metcut

Wind Technology Testing Center (WTTC) | MassCEC

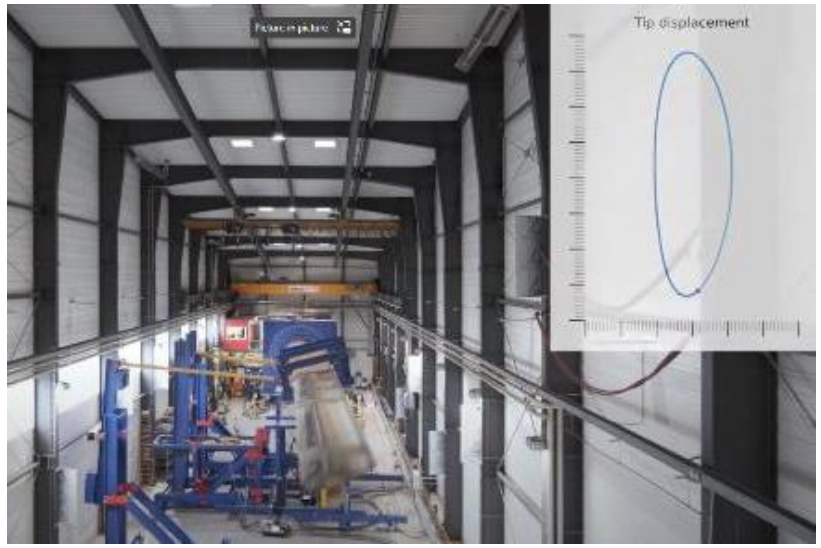

Full scale blade testing (fraunhofer.de)

https://www.youtube.com/watch?v=BOpBzKanX9k

Case Study 11 – Tubular Agitator

Early 2000s Fatigue cracking was observed in a 1.9m diameter by 2.8m high tubular ribbon blender used for low shear agitation in resin manufacture.

The cracking occurred at the junction between the outer helical tubes and the main horizontal arms.

In-situ strain gauging was used to determine the root cause of the damage.

Recordings were taken throughout the speed range of the machine, 20-45 rpm.

The instrument installation inside the agitator was complex due to the design and use of the equipment.

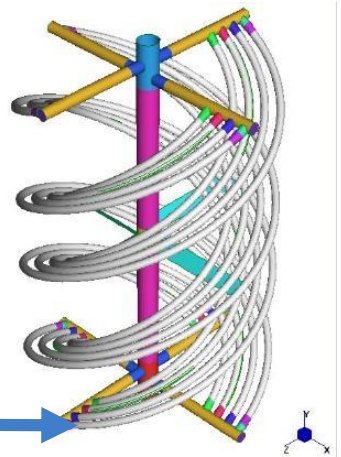

Case Study 11 – Tubular Agitator

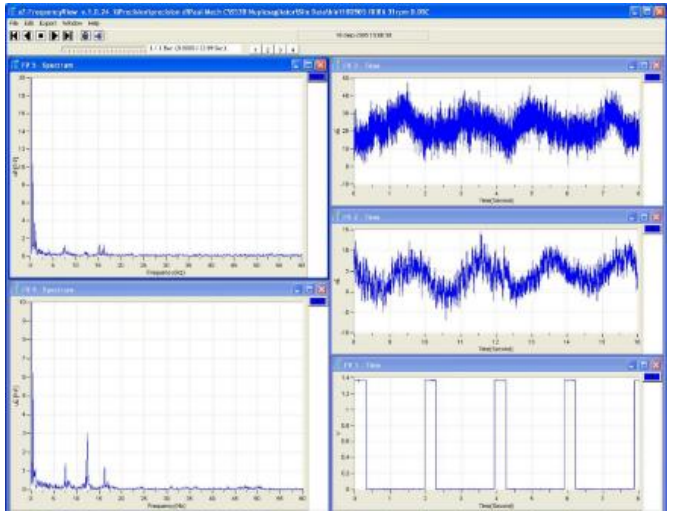

20rpm – very low levels as expected

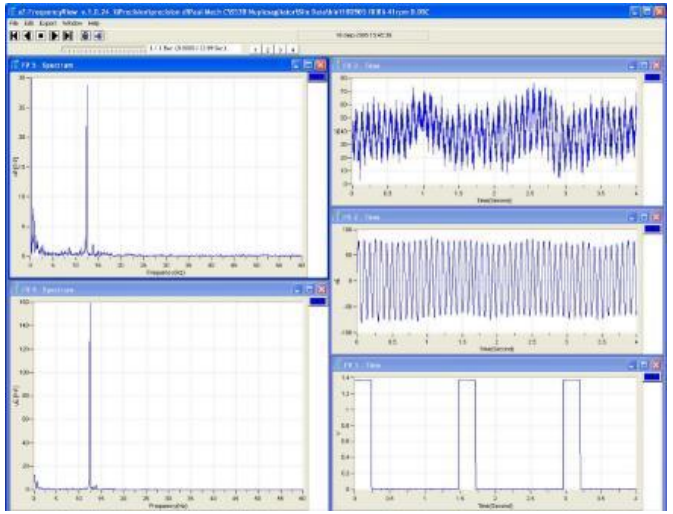

41rpm – obvious resonant situation – but what was causing it?

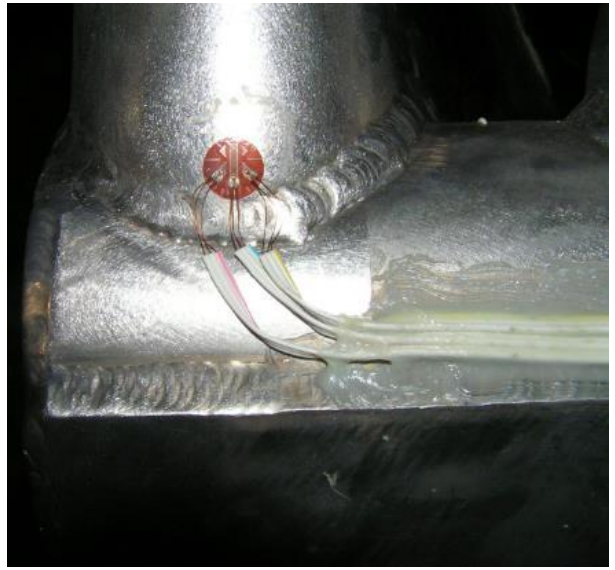

Case Study 11 – Tubular Agitator

High 12.4 Hz oscillating strains were recorded at 41rpm.

Normal modes analysis and computation fluid dynamics indicated vortex shedding resonant excitation of the 5th natural frequency of the rotor.

The high alternating stresses are created through an out of phase oscillation of the top and bottom horizontal arms.

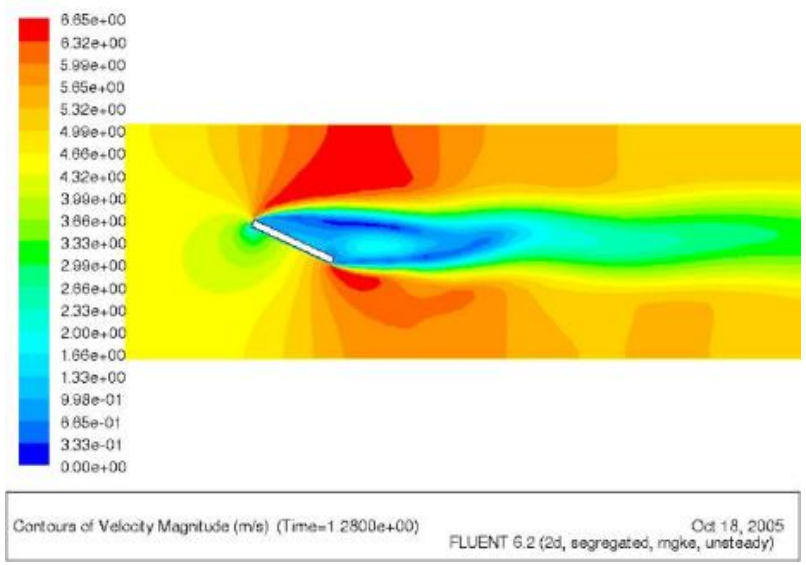

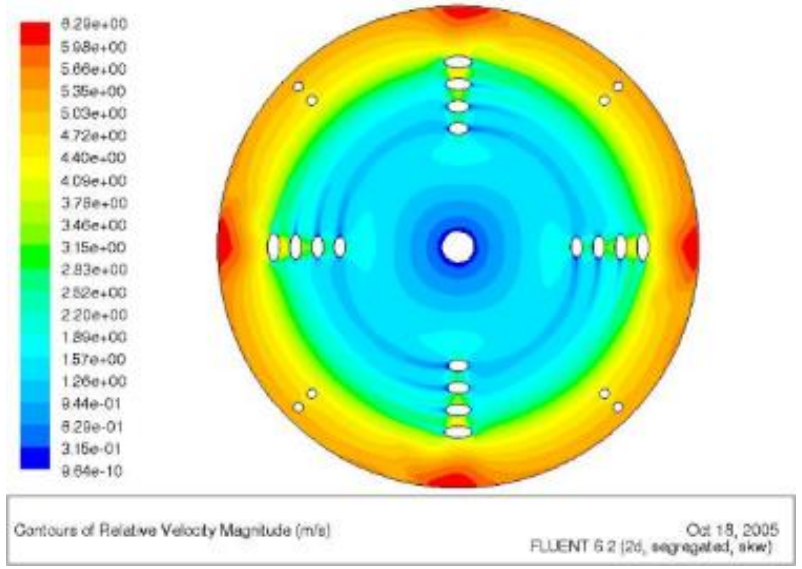

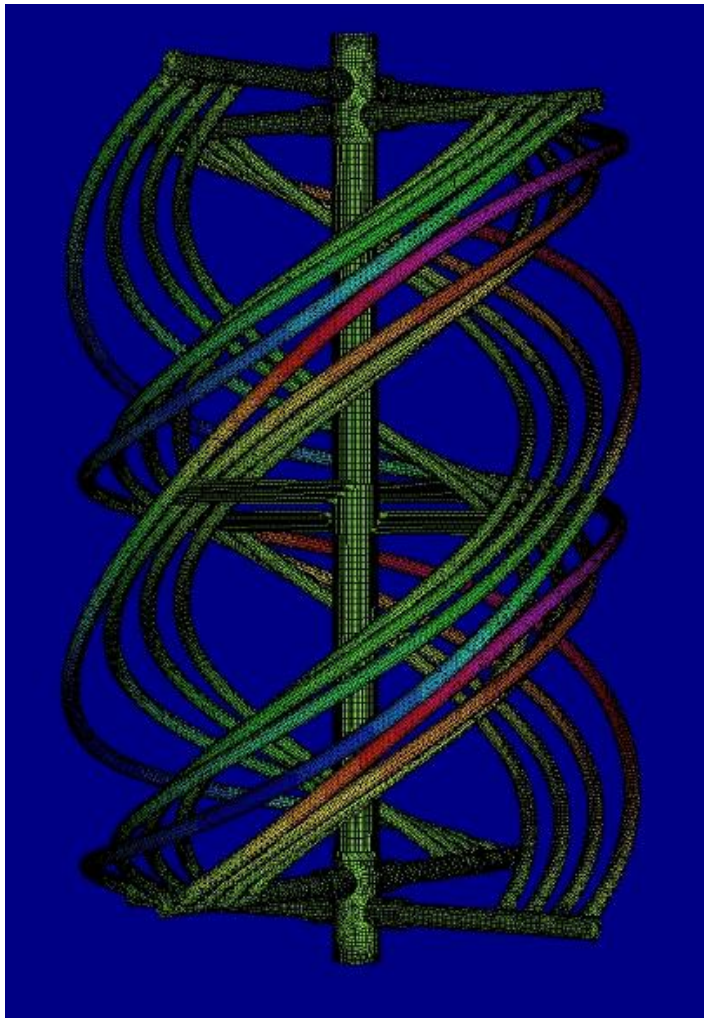

Case Study 11 – Tubular Agitator

The recordings during the complete speed range of the mixer (20-45rpm), indicated high 12.4Hz alternating strains at around 41rpm. Correlations of normal modes analysis and computational fluid dynamics indicated vortex shedding resonant excitation of the 5th natural frequency mode of the rotor. There is virtually no damping in the rotor structure.

The plot and avi below shows the vertical deformation contour plot of this mode, characterised by an out-of-phase oscillation of the top and bottom main arms which inherently created high alternating stress at the helical flight to arm joints. Rectification assessments led to the addition of vertical tubes as below, which stiffened the rotor that has operated successfully since.

BE PARTICULARLY CAREFUL OF VARIABLE SPEED MACHINERY

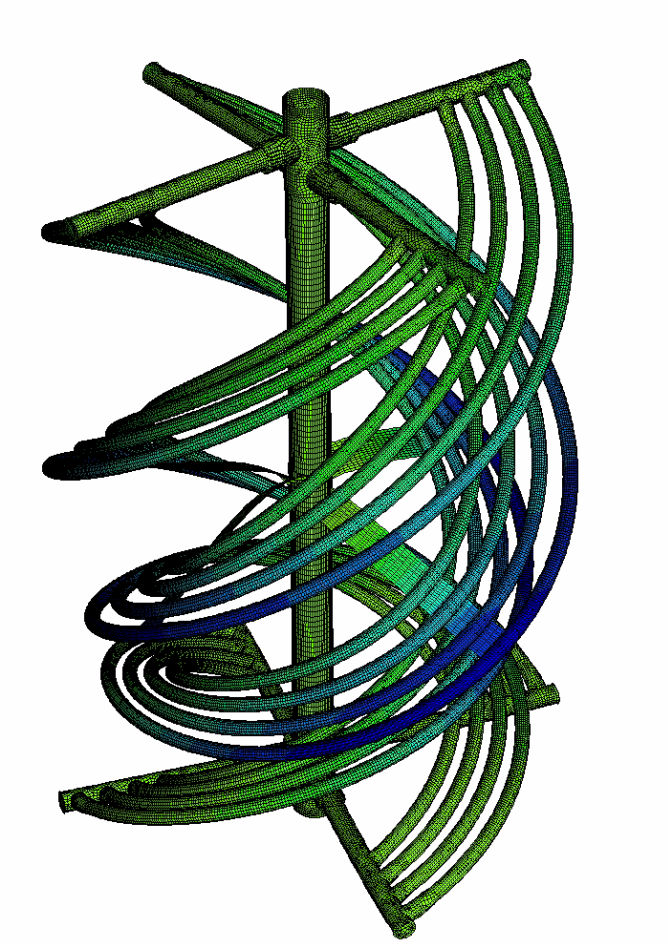

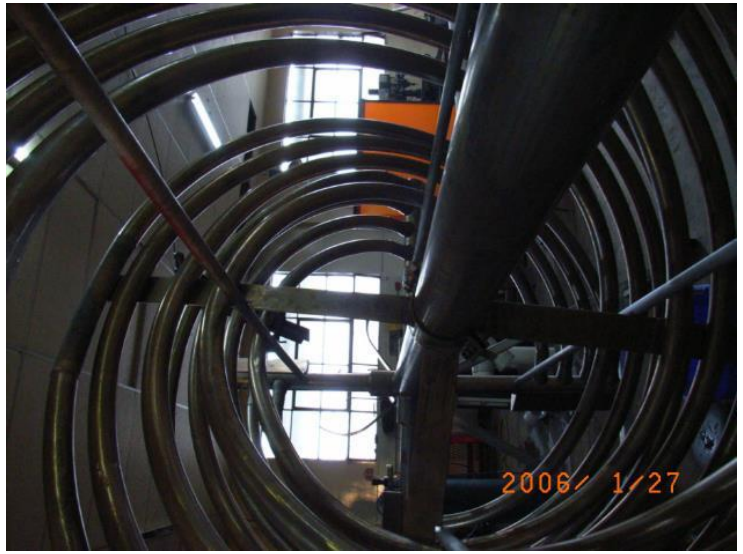

Fatigue design, verification and validation of mechanical equipment under fatigue loadings

Great thanks for attending. Quick questions.

(2 pages of 39 References to follow)

References

1. Mogroup.com (Metso Outotec)
2. BS7608:2014 “Guide to Fatigue Design and Assessment of Steel Products”.
3. ASM International 2008 Ch14 Fatigue.
4. Generation and use of standardised load spectra and load-time histories Article in International Journal of Fatigue. August 2005 Heuler, Klatschke.
5. IIW document IIW-1823-07 ex XIII-2151r4-07/XV-1254r4-07 December 2008 RECOMMENDATIONS FOR FATIGUE DESIGN OF WELDED JOINTS AND COMPONENTS. Hobbacher
6. IIW International Institute of Welding (IIW), XIII-2460-13 – “Recommendations for Fatigue Design of Welded Joints and Components, 2013”. (2nd ed 2014)
7. Metal Fatigue in Engineering. 2nd ed. Stephens, Fatemi, Stephens, Fuchs. 2001.
8. Multiaxial Fatigue. Socie, Marquis. 2013.
9. Fatigue assessment of welded joints by local approaches”. 2nd edition 2006. Radaj, Sonsino and Fricke.
10. IIW 2018 document “Structural Hot-Spot Stress Approach to Fatigue Analysis of Welded Components. Designers Guide. Niemi, Fricke and Maddox.
11. Introduction to metal fatigue. Mechanical Engineering Technical Report ME-TR-11 M M Pedersen. 2018
12. Benchmarking Newer Multiaxial Fatigue Strength Criteria on Data Sets of Various Sizes. Papuga, Nesládek, Hasse, Cízová and Suchý. MDPI 2022.
13. Fatigue Design of Process Equipment ASME Plant Engineering & Maintenance Technical Chapter March 12, 2009. Hinnant Paulin Research Group
14. AS1554.5 Structural steel welding. Welding of steel structures subject to high levels of fatigue loading
15. International Institute of Welding. Best Practice Guide on Statistical Analysis of Fatigue Data. C R A Schneider and S J Maddox. 2003.
16. www.rud.com.au
17. CAEFatigue (Hexagon) https://hexagon.com/Products/Product-Groups/computer-aided-engineering-software/CAEFatigue
18. FE-Safe (3DS) https://www.3ds.com/products-services/simulia/products/fe-safe/fe-safe/
19. nCode https://www.ncode.com/
20. Cidect Construction with Hollow Steel Sections Design Guide 8 – “For circular and rectangular hollow section welded joints subject to fatigue loading”. 2001.

References

21. SAE Fatigue Design Handbook.
22. The site www.efatigue.com has many useful folders.
23. This document has good background on weld quality; https://link.springer.com/content/pdf/10.1007%2Fs40194-017-0490-5.pdf
24. Niels Ostergaard mechanics lectures; https://www.hochschule-rhein-waal.de/en/faculties/technology-and-bionics/organisation-and-office-hours/professors/prof-dr-niels-ostergaard
25. VDI 2230 Systematic calculation of high duty bolted joints
26. ASTM E1049 Standard Practices for Cycle Counting in Fatigue Analysis
27. Ship Performance under Multiaxial Loading. SSC-356. 1990.
28. Validation of Multiaxial Fatigue Strength Criteria on Specimens from Structural Steel in the High-Cycle Fatigue Region. František Fojtík, Jan Papuga, Martin Fusek and Radim Halama. MDPI 2021.
29. Hot spot stress assessment at fillet welded joint using different finite element weld modelling techniques and its validation. R Chillal, N Pagar. WJERT, 2016, Issue 5, 270-290.
30. Stress Analysis and Fatigue of Welded structures. G Glinka, M S El-Zein, R A Formas. Welding in the world, July 2013.
31. Procedural Benchmarks for Common Fabrication Details in Plate/Shell Structures. NAFEMS Publications, March 2005, ISBN-13-1874376026.
32. Atlas of Fatigue Curves. Editor HE Boyer. ASM International.
33. IIW-Doc. XIII-2380r3-11/XV-1383r3-11 Guideline for the Assessment of Weld Root Fatigue. W Fricke. Welding in the World. Vol 57 2013.
34. On the interaction of axial and bending loads in the weld root fatigue strength assessment of load-carrying cruciform joints. A Ahola · R Hamidreza · T Björk · O Kukkonen Welding in the World (2022) 66:731–744
35. FKM-Guideline. Analytical strength assessment of components in mechanical engineering 5th edition. 2003. English Version Translation by E. Haibach
36. Investigation of fatigue assessments accuracy for beam weldments considering material data input and FE-mode type. Yevgen Gorash et al 2017 J. Phys.: Conf. Ser. 843 01202
37. Effect of increased yield strength, R-ratio, and plate thickness on the fatigue resistance of high-frequency mechanical impact (HFMI)–treated steel joints M. Leitner & Z. Barsoum Welding in the World 2020 64:1245-1259
38. Influence of the mean stress on the fatigue life of welded joints under variable amplitude loading Xu Liu, Yan-Hui Zhang, Bin Wang, Xing Sun. International Journal of Fatigue. 163 (2022)
39. https://community.sw.siemens.com/s/article/mean-stress-corrections-and-stress-ratios

Upcoming EIT Courses

We have a range of courses in Civil, Electrical, Mechanical and Industrial Automation Engineering.

Course Type	Intakes/start date
Professional Certificate of Competency courses (short courses)	Throughout the year
Diploma & Advanced Diploma courses	Throughout the year
Undergraduate Certificates	13 February 2023
Bachelor of Science degrees	13 February 2023
Graduate Certificates	2 January 2023
Master of Engineering degrees	2 January 2023
Doctor of Engineering	13 February 2023
On Campus Bachelor's, Master's and Doctor of Engineering programs	20 February 2023

See our full course schedule here: www.eit.edu.au/schedule/

Upcoming Webinars

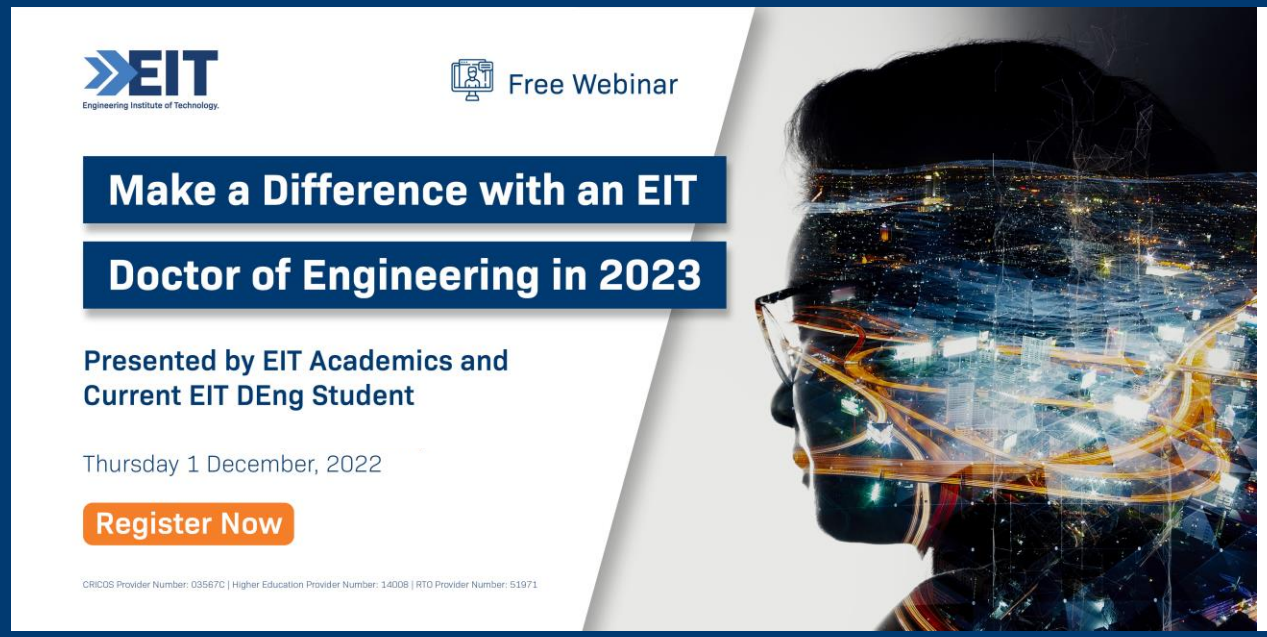

Register for our upcoming webinars here: www.eit.edu.au/news-events/events/

Certificate of Attendance

To receive your digital certificate of attendance for participating in this webinar, please fill out the form and survey here (or scan the QR Code):

qrco.de/bdXTIw

Please note that Certificate of Attendances will be sent out in the next 1-2 business days.

SCAN ME

Engineering Institute of Technology.

Thank you for attending.

Contact Us:

Website
www.eit.edu.au

Head Office
1031 Wellington Street West Perth
Perth, WA 6005

Phone
Inside Australia: 1300 138 522
Outside Australia: +61 8 9321 1702

Email
webinars@eit.edu.au

Courses
https://www.eit.edu.au/schedule/